MGM Brakes

Worldwide 2021

MASTER CATALOG

FORM NO. 6000SS
Revised 1-2021

ABOUT MGM BRAKES

A little bit of history...

For over 60 years, MGM Brakes has been a leader in commercial vehicle actuator technology, providing service chambers and spring parking brakes engineered to operate in the harshest environments.

In 1956, when heavy over-the-road vehicles, lacking a reliable air-brake backup device, were experiencing air system failures, MGM's founders came up with an innovative solution to this industry safety problem; designing and patenting the first spring parking brake. Their innovation achieved worldwide acceptance as a simple solution to a serious problem that had plagued the transportation industry for decades.

MGM Brakes rapidly progressed from its humble origins to industry-leader status, developing drum and air disc actuators designed to address the operational requirements and varied environments of all segments of the commercial vehicle industry.

Keeping safety at the forefront, MGM began to focus on advanced technologies for the pre-trip inspection. To help with this daily task, MGM designed and patented, e•STROKE®, electronic brake monitoring systems for drum and air disc brakes. These systems help with verifying proper brake setup and operation on commercial vehicle brake actuators, as well as provide continuous real-time brake monitoring on any air brake equipped vehicle.

Whichever MGM Brakes product you select, you'll be getting the best product designed and manufactured by the acknowledged worldwide leader.

Ron Parker

Ron Parker
Chairman, President and CEO

Corporate Office

For technical assistance, pricing information or special requests, contact MGM Brakes Corporate Office:

MGM Brakes • 6200 Harris Technology Blvd. • Charlotte, North Carolina 28269

Toll Free Phone: (800) 527-1534 • Phone: (704) 547-7411 • Fax: (704) 547-9367

e-mail: mail@mgmbrakes.com • website: www.MGMBrakes.com

ISO 9001:2015 ISO 14001:2015

Visit our website for more information...

www.mgmbrakes.com

Your comprehensive source for MGM Brakes products and company information.

- e•Commerce is available on our website.
- Order publications/CD's on-line - FREE, with our product literature request form. (shipping charges apply outside U.S. and Canada)
- Customer portal allows easy access for customers to check order status, view pricing and promotions.
- Easy cross reference for part numbers.
- Live Chat feature allows you real time communication with our knowledgable customer service representatives.
- Pay invoices online via credit card.

Parts Distribution Centers

MGM Brakes - PDC
U.S.A. Parts Distribution Center

1100 N. Glenstone, Suite 170
Springfield, Missouri 65802
Toll Free Phone: (877) 294-5906
Toll Free Fax: (877) 294-6316
Phone: (417) 862-0092
Fax: (417) 862-7850
e-mail:pdc@mgmbrakes.com

ISO 9001:2015 **SO 14001:2015**

MGM Brakes - PDC
Canadian Parts Distribution Center

25 Bramtree Ct.
Brampton, Ontario L6S 5Z7
Toll Free Phone: (877) 294-5906
Toll Free Fax: (877) 294-6316
Phone: (417) 862-0092
Fax: (417) 862-7850
e-mail:pdc@mgmbrakes.com

MGM Brakes - PDC
European Parts Distribution Center

Rotterdam-Maasvlakte
Makassarweg 1 3199 LL
Rotterdam, The Netherlands
Phone: +31-181-251.152
Email: maasvlakte@broekmanlogistics.com

Manufacturing Plants

MGM Brakes
Murphy - Manufacturing Plant

P.O. Box 70
229 Park Avenue
Murphy, North Carolina 28906
Phone: (828) 837-2117
Fax: (828) 837-7521
Toll Free Fax: (800) 258-8117

ISO 9001:2015 **ISO 14001:2015**

MGM Brakes
Cloverdale - Manufacturing Plant

P.O. Box 249
1184 South Cloverdale Blvd.
Cloverdale, California 95425
Phone: (707) 894-3333
Fax: (707) 894-5704
Toll Free Fax: (800) 266-5750

ISO 9001:2015 **ISO 14001:2015**

International Sales

MGM BRAKES – CANADA/INTERNATIONAL
Rick Deane
International Sales Manager
E-mail: rdeane@mgmbrakes.com

MGM BRAKES – MEXICO, CENTRAL AND SOUTH AMERICA
Len Gonzalez
National Sales Manager - Vocational Markets
E-mail: lgonzalez@mgmbrakes.com

MGM BRAKES – EUROPE
Cees vanLeipsig
Technical Sales Account Manager - Europe
E-mail: cvanleipsig@mgmbrakes.com

NOTE: Product information and specifications subject to change without notice. Refer to the MGM Brakes website for latest updated information.

INDEX

Page(s)

Part Number/Model Designation Charts. 6-9
Understanding MGM Brakes Part Numbers 9

Section 1: S-Cam Brakes 10-75
Corrosion Fighter Technology 16
Industry Safety Reminder - Danger of Double Clamp Banded Spring Brakes 17

TR Standard Stroke Models

TR	Tamper Resistant	18-19
TR-HD	Tamper Resistant, Heavy-Duty	20-21
TR-HDW	Tamper Resistant, Heavy-Duty, Welded NPC	22-23
TR-T	Tamper Resistant, Tube	24-25
TR-THD	Tamper Resistant, Tube, Heavy-Duty	26-27
TR-THDW	Tamper Resistant, Tube, Heavy-Duty, Welded NPC	28-29
TR-TS	Tamper Resistant, Tube, Severe Service	30-31
TR-TSHD	Tamper Resistant, Tube, Severe Service, Heavy-Duty	32-33
TR-TSHDW	Tamper Resistant, Tube, Severe Service, Heavy-Duty, Welded NPC	34-35

TR Long Stroke Models

TR-LP3/TR-L3	Tamper Resistant, Long Stroke	36-37
TR-LP3HD	Tamper Resistant, Long Stroke, Heavy-Duty	38-39
TR-LP3T/TR-L3T	Tamper Resistant, Long Stroke, Tube	40-41
TR-LP3THD	Tamper Resistant, Long Stroke, Tube, Heavy-Duty	42-43
TR-LP3THDW	Tamper Resistant, Long Stroke, Tube, Heavy-Duty, Welded NPC	44-45
TR-LP3TS	Tamper Resistant, Long Stroke, Tube, Severe Service	46-47
TR-LP3TSHD	Tamper Resistant, Long Stroke, Tube, Severe Service, Heavy-Duty	48-49
TR-LP3TSHDW	Tamper Resistant, Long Stroke, Tube, Severe Service, Heavy-Duty, Welded NPC	50-51

LTR Standard Stroke Model

LTR-T	Integral Release Bolt, Tamper Resistant, Tube	52-53

LTR Long Stroke Models

LTR-L3	Integral Release Bolt, Tamper Resistant, Long Stroke	54-55
LTR-L3W	Integral Release Bolt, Tamper Resistant, Long Stroke, Welded NPC	56-57
LTR-L3T	Integral Release Bolt, Tamper Resistant, Long Stroke, Tube.	58-59
LTS	Integral Release Bolt, Tamper Resistant, Long Stroke, Tube	60-61

NOTE: Product information and specifications subject to change without notice. Refer to the MGM Brakes website for latest updated information.

Page(s)

MJS Standard Stroke Model

MJS Magnum J-Series, 1.75” Stroke, Tube....62-63

MJS Long Stroke Model

MJS Magnum J-Series, 3.00” Stroke, Tube....64-69

Service Chamber - Standard Stroke Model

C S Cam....70-71

Service Chamber - Long Stroke Models

CL S Cam, Long Stroke....72-73

CS S Cam, Long Stroke, Sealed....74-75

Section 2: Wedge Spring Brakes....76-83

CW Wedge Service Chamber....78-79

MJW MJW1216AT/MJW1616AT Magnum Performance Plus, Wedge 1.75” (44.5 mm)....80-81

MJW MJW1624BT Magnum Performance Plus, Wedge 2.00” (50.8 mm)....82-83

Section 3: Air Disc Brakes....84-89

Service Chambers

CSB Sealed Service Chamber....86

Double Diaphragm

TRB Tamper Resistant, Tube....87

Piston Diaphragm

MJB Magnum, J-Series, 2.50” (63.5 mm) Stroke, Tube....88

Visual Safety Inspections of Air Disc Brakes....89

NOTE: Product information and specifications subject to change without notice. Refer to the MGM Brakes website for latest updated information.

Page(s)

Section 4: Remote Mount Cylinders 90-95
R4A Remote Mount Cylinder 92-93
R5AHD Remote Mount Cylinder, Heavy-Duty 92-93
R7A Remote Mount Cylinder, Spring Applied - Air Release 94-95
R8H Remote Mount Cylinder, Spring Applied - Hydraulic Release 94-95

Section 5: Vocational 96-105
Model Application Chart 98
Actuators Manufactured with Neoprene Diaphragms 99
MGM Waste Chamber Breakdown Sheet with Neoprene Diaphragms 100
MGM Waste Chamber Breakdown Sheet with Natural Rubber Diaphragms 101
Welded Yoke Replacement Instruction 102
Welded Yokes Application Guide 104-105

Section 6: Special Applications 106-113
Special Length Push Rods 108
Hendrickson Intraax and Vantraax Suspension Applications 109
12" and 18" Extended Length Push Rods 110
School Bus Applications 112
Fire Truck Applications 113

Section 7: Road Truck Chamber Applications 114-115
Tractor/Trailer Quick Reference Chamber Replacement Guide 115

Section 8: e•STROKE® Brake Monitoring Systems 116-131
Introduction 118
How e•STROKE® Works 119-120
e•STROKE® Specifications 122
e•STROKE® Diagnostics 123
e•STROKE® Training and Support 125-127
e•STROKE® System Parts - ECU Power and Auxiliary Cables 128
e•STROKE® System Parts - Actuator Sensors and Harnesses 128
e•STROKE® System Parts - Pressure Transducer and Harnesses 129
e•STROKE® System Parts - GEN 3 ECU's 130
e•STROKE® System Parts - GEN 1 & GEN 2 Replacement Service Kits 130
e•STROKE® System Parts - Diagnostic Tools 131

Section 9: Replacement Parts 132-139
Kits - Breather Cap, End Cap & Weatherseal™ Plug 134
Diaphragms, Kit - Release Bolt, Clamp Bands 134
Kits - S-Cam Protective Boots & Center Hole Shield, Breather Tube and Elbow Kit 135
Kits - Nuts and Washers, ... 135
Non-Pressure Chamber (With and Without Breather Elbow), Vent Hole - Plug 135
Welded Yoke Assemblies 136
Welded Yoke Assemblies (continued), Yoke Pins (Stainless Steel) 137

NOTE: Product information and specifications subject to change without notice. Refer to the MGM Brakes website for latest updated information.

Page(s)

Yoke Assemblies, Yoke Assemblies - 2 Pin 138
Push-Rod Assembly and Nut Kits 139

Section 10: Technical Information 140-165
MJS Service Diaphragm Replacement 142
Product Identification Plate 143
Long Stroke Identification 144
Double-Diaphragm to Piston Conversion Chart 145
Procedure to Cut a Push-Rod 146
Proper Brake Adjustment 147
Fastener Torque Value Chart 148
Procedure to Lengthen External Breather Tube 149
Mixing Standard and Long Stroke Chambers 150
Field Replacement - Consideration for Brake Actuators with Welded Yokes 151
Performance Chart - Spring Brake Chambers (including Remote Mount Cylinders) - SAE 152
Performance Chart - Service Brake Chambers - SAE 153-158
Performance Chart - Spring Brake Chambers (including Remote Mount Cylinders) - METRIC 159
Performance Chart - Service Brake Chambers - METRIC 160-165

Section 11: BrakeTECH Self-Study Training Program 164-165

Section 12: Warranty Policies 168-173
Limited Warranty Policy 170-172
Contact Outside U.S.A. and Canada 173

Section 13: Glossary of Terms 174-181

KEY TO MODEL "PREFIXES"	KEY TO MODEL "SUFFIXES"
C = SERVICE CHAMBER	A = 1.75" (44.5 mm) STROKE (MAGNUM PERFORMANCE PLUS)
CS = SERVICE CHAMBER / SEALED	B = 2.00" (50.8 mm) STROKE
CW = SERVICE CHAMBER/WEDGE	C = 2.25" (57.1 mm) STROKE
LTR = INTEGRAL RELEASE BOLT/TAMPER RESISTANT	D = 2.50" (63.5 mm) STROKE
LTS = INTEGRAL RELEASE BOLT/TAMPER RESISTANT	E = 3.00"(76.2 mm) LONG STROKE (MAGNUM PERFORMANCE PLUS)
M = MAGNUM	ESH = UNIT EQUIPPED WITH e•STROKE® / DRUM
MJB = MAGNUM PERFORMANCE PLUS / DISC	ESK = UNIT EQUIPPED WITH e•STROKE® / DISC
MJS = MAGNUM PERFORMANCE PLUS / S-CAM	H = HYBRID
MJW = MAGNUM PERFORMANCE PLUS / WEDGE	HD = HEAVY DUTY
TR = TAMPER RESISTANT	L = LONG STROKE
TRB =TAMPER RESISANT / DISC	L3 = 3.00" (76.2 mm) LONG STROKE CHAMBER
CSB = SEALED SERVICE CHAMBER / DISC	LP3 = 3.00" (76.2 mm) LONG STROKE / LOW PROFILE
	S = SEVERE SERVICE
	T = BREATHER TUBE
	W = WELDED MOUNTING BOLTS

NOTE: Product information and specifications subject to change without notice. Refer to the MGM Brakes website for latest updated information.

PART NUMBER / MODEL DESIGNATION

P/N Series	Model	Stroke inch (mm)	Part Description	Page Number(s)	Obsolete	Replaced By
SERVICE CHAMBERS						
1009	CW9	1.75" (44.5 mm)	Wedge Service	78-79		
1012	CW12	1.75" (44.5 mm)	Wedge Service	78-79		
1016	CW16	1.75" (44.5 mm)	Wedge Service	78-79		
1412	C12	1.75" (44.5 mm)	CAM Service	70-71		
1416	C16	2.25" (57.1 mm)	CAM Service	70-71		
1417	C16L	2.50" (63.5 mm)	CAM Service	•	X	1617
1418	C16L2.5	2.50" (63.5 mm)	CAM Service	72-73		
1420	C20	2.25" (57.1 mm)	CAM Service	70-71		
1421	C20L	2.50" (63.5 mm)	CAM Service	72-73		
1427	C24L	2.50" (63.5 mm)	CAM Service	70-71		
1428	C24L3	3.00" (76.2 mm)	CAM Service	72-73		
1430	C30	2.50" (63.5 mm)	CAM Service	70-71		
1431	C30L3	3.00" (76.2 mm)	CAM Service	72-73		
1436	C36	3.00" (76.2 mm)	CAM Service	70-71		
1617	CS16LH	2.50" (63.5 mm)	CAM Service	74-75		
1621	CS20L	2.50" (63.5 mm)	CAM Service	74-75		
1623	CS20L3	3.00" (76.2 mm)	CAM Service	74-75		
1627	CS24L	2.50" (63.5 mm)	CAM Service	74-75		
1628	CS24L3	3.00" (76.2 mm)	CAM Service	74-75		
1630	CS30	2.50" (63.5 mm)	CAM Service	74-75		
1631	CS30L3	3.00" (76.2 mm)	CAM Service	74-75		
1640	CS24LW	2.50" (63.5 mm)	CAM Service	74-75		
WEDGE BRAKES						
1009	CW9	1.75" (44.5 mm)	Wedge Service	78-79		
1012	CW12	1.75" (44.5 mm)	Wedge Service	78-79		
1016	CW16	1.75" (44.5 mm)	Wedge Service	78-79		
2014	WM1216	1.75" (44.5 mm)	Wedge Spring/Service	•	X	MJW1216AT
2017	WM1624LG-T	2.00" (50.8 mm)	Wedge Spring/Service	•	X	MJW1624BT
2212	WL1216	1.75" (44.5 mm)	Wedge Spring/Service	•	X	MJW1216AT
MJW1216AT	MJW1216AT	1.75" (44.5 mm)	Wedge Piston/Spring/Service	80-81		
MJW1616AT	MJW1616AT	1.75" (44.5 mm)	Wedge Piston/Spring/Service	80-81		
MJW1624BT	MJW1624BT	2.00" (50.8 mm)	Wedge Piston/Spring/Service	82-83		
DOUBLE DIAPHRAGM SPRING BRAKES						
3220	TR2030LP3H	3.00" (76.2 mm)	CAM Spring/Service	36-37		
3221	TR2030LP3TH	3.00" (76.2 mm)	CAM Spring/Service	40-41		
3224	TR2430LP3	3.00" (76.2 mm)	CAM Spring/Service	36-37		
3225	TR2430LP3T	3.00" (76.2 mm)	CAM Spring/Service	40-41		
3226	TR2430LP3HD	3.00" (76.2 mm)	CAM Spring/Service	38-39		
3227	TR2430LP3THD	3.00" (76.2 mm)	CAM Spring/Service	42-43		
3230	TR3030LP3	3.00" (76.2 mm)	CAM Spring/Service	36-37		
3231	TR3030LP3T	3.00" (76.2 mm)	CAM Spring/Service	40-41		
3232	TR3030LP3HD	3.00" (76.2 mm)	CAM Spring/Service	38-39		
3233	TR3030LP3THD	3.00" (76.2 mm)	CAM Spring/Service	42-43		
3234	TR3036L3	3.00" (76.2 mm)	CAM Spring/Service	36-37		
3235	TR3036L3T	3.00" (76.2 mm)	CAM Spring/Service	40-41		
3244	TR3030LP3THDW	3.00" (76.2 mm)	CAM Spring/Service	44-45		

Note: For Transit / Special Applications (i.e. rod length, etc.,) refer to Section 6.

NOTE: Product information and specifications subject to change without notice. Refer to the MGM Brakes website for latest updated information.

P/N Series	Model	Stroke inch (mm)	Part Description	Page Number(s)	Obsolete	Replaced By
3420	TR2024	2.25" (57.1 mm)	CAM Spring/Service	18-19		
3421	TR2024T	2.25" (57.1 mm)	CAM Spring/Service	24-25		
3426	TR2424LT	2.50" (63.5 mm)	CAM Spring/Service	24-25		
3427	TR2424L	2.50" (63.5 mm)	CAM Spring/Service	18-19		
3428	TR2430LT	2.50" (63.5 mm)	CAM Spring/Service	24-25		
3429	TR2430L	2.50" (63.5 mm)	CAM Spring/Service	18-19		
3430	TR3030	2.50" (63.5 mm)	CAM Spring/Service	18-19		
3431	TR3030T	2.50" (63.5 mm)	CAM Spring/Service	24-25		
3432	TR3036T	2.50" (63.5 mm)	CAM Spring/Service	24-25		
3433	TR3036	2.50" (63.5 mm)	CAM Spring/Service	18-19		
3434	TR3024	2.50" (63.5 mm)	CAM Spring/Service	18-19	X	
3435	TR3024T	2.50" (63.5 mm)	CAM Spring/Service	24-25	X	
3436	TR3636T	3.00" (76.2 mm)	CAM Spring/Service	24-25		
3331	TR3030L3-T	3.00" (76.2 mm)	CAM Spring/Service	•	X	3231
3437	TR3636	3.00" (76.2 mm)	CAM Spring/Service	18-19		
3443	TR3030HDW	2.50" (63.5 MM)	CAM Spring/Service	22-23		
3444	TR3030THDW	2.50" (63.5 mm)	CAM Spring/Service	28-29		
3523	TR2430LP3TS	3.00" (76.2 mm)	CAM Spring/Service	46-47		
3526	TR2430LTSHD	2.50" (63.5 mm)	CAM Spring/Service	32-33		
3527	TR2430LP3TSHD	3.00" (76.2 mm)	CAM Spring/Service	48-49		
3528	TR2430LTS	2.50" (63.5 mm)	CAM Spring/Service	30-31		
3531	TR3030TS	2.50" (63.5 mm)	CAM Spring/Service	30-31		
3532	TR3036TS	2.50" (63.5 mm)	CAM Spring/Service	30-31		
3533	TR3030TSHD	2.50" (63.5 mm)	CAM Spring/Service	32-33		
3534	TR3030LP3TSHD	3.00" (76.2 mm)	CAM Spring/Service	48-49		
3535	TR3030LP3TS	3.00" (76.2 mm)	CAM Spring/Service	46-47		
3536	TR3636TS	3.00" (76.2 mm)	CAM Spring/Service	30-31		
3538	TR2424LTS	2.50" (63.5 mm)	CAM Spring/Service	30-31		
3544	TR3030TSHDW	2.50" (63.5 mm)	CAM Spring/Service	34-35		
3545	TR3030LP3TSHDW	3.00" (76.2 mm)	CAM Spring/Service	50-51		
3624	TR2430LHD	2.50" (63.5 mm)	CAM Spring/Service	20-21		
3625	TR2430LTHD	2.50" (63.5 mm)	CAM Spring/Service	26-27		
3630	TR3030HD	2.50" (63.5 mm)	CAM Spring/Service	20-21		
3631	TR3030THD	2.50" (63.5 mm)	CAM Spring/Service	26-27		

LONG LIFE DOUBLE DIAPHRAGM SPRING BRAKES

3827	LTR2430LT	2.50" (63.5 mm)	CAM Spring/Service	52-53		
3828	LTR2430L3	3.00" (76.2 mm)	CAM Spring/Service	54-55		
3831	LTR3030T	2.50" (63.5 mm)	CAM Spring/Service	52-53		
3832	LTR3030L3	3.00" (76.2 mm)	CAM Spring/Service	54-55		
3833	LTR3030L3T	3.00" (76.2 mm)	CAM Spring/Service	58-59		
3844	LTR3030L3W	3.00" (76.2 mm)	CAM Spring/Service	56-57		
LTS3030ET	LTS3030ET	3.00" (76.2 mm)	CAM Spring/Service	60-61		

PISTON BRAKES

4112	M1216G-T	1.75" (44.5 mm)	CAM Piston/Spring/Service	•	X	MJS1216AT
4115	M1620LGT	2.50" (63.5 mm)	CAM Piston/Spring/Service	•	X	MJS1724ET
4117	M1624LGT	2.50" (63.5 mm)	CAM Piston/Spring/Service	•	X	MJS1724ET
4119	M2020LGT	2.50" (63.5 mm)	CAM Piston/Spring/Service	•	X	MJS2024ET
4120	M2024LGT	2.50" (63.5 mm)	CAM Piston/Spring/Service	•	X	MJS2024ET

NOTE: Product information and specifications subject to change without notice. Refer to the MGM Brakes website for latest updated information.

NOTE: For Transit / Special Applications (i.e. rod length, etc.,) refer to Section 6.

PART NUMBER / MODEL DESIGNATION

P/N Series	Model	Stroke inch (mm)	Description	Page Number(s)	Obsolete	Replaced By
4122	M2420LGT	2.50" (63.5 mm)	CAM Piston/Spring/Service	•	X	MJS2424ET
4124	M2424LGT	2.50" (63.5 mm)	CAM Piston/Spring/Service	•	X	MJS2424ET
4128	M2430LGT	2.50" (63.5 mm)	CAM Piston/Spring/Service	•	X	MJS2430ET
4131	M3027GT	2.50" (63.5 mm)	CAM Piston/Spring/Service	•	X	MJS3028ET
4133	M3024GT	2.50" (63.5 mm)	CAM Piston/Spring/Service	•	X	MJS3024ET
4420	M2030LGT	2.50" (63.5 mm)	CAM Piston/Spring/Service	•	X	MJS2030ET
4430	M3030GT	2.50" (63.5 mm)	CAM Piston/Spring/Service	•	X	MJS3028ET
4431	M3031GT	2.50" (63.5 mm)	CAM Piston/Spring/Service	•	X	MJS3030ET
MJS1216AT	MJS1216AT	1.75" (44.5 mm)	CAM Piston/Spring/Service	62-63		
MJS1722ET	MJS1722ET	3.00" (76.2 mm)	CAM Piston/Spring/Service	•	X	
MJS1724ET	MJS1724ET	3.00" (76.2 mm)	CAM Piston/Spring/Service	64-65		
MJS2022ET	MJS2022ET	3.00" (76.2 mm)	CAM Piston/Spring/Service	•	X	
MJS2024ET	MJS2024ET	3.00" (76.2 mm)	CAM Piston/Spring/Service	64-65		
MJS2030ET	MJS2030ET	3.00" (76.2 mm)	CAM Piston/Spring/Service	68-69		
MJS2422ET	MJS2422ET	3.00" (76.2 mm)	CAM Piston/Spring/Service	•	X	
MJS2424ET	MJS2424ET	3.00" (76.2 mm)	CAM Piston/Spring/Service	66-67		
MJS2430ET	MJS2430ET	3.00" (76.2 mm)	CAM Piston/Spring/Service	66-67		
MJS3022ET	MJS3022ET	3.00" (76.2 mm)	CAM Piston/Spring/Service	•	X	
MJS3024ET	MJS3024ET	3.00" (76.2 mm)	CAM Piston/Spring/Service	66-67		
MJS3028ET	MJS3028ET	3.00" (76.2 mm)	CAM Piston/Spring/Service	68-69		
MJS3030ET	MJS3030ET	3.00" (76.2 mm)	CAM Piston/Spring/Service	68-69		
MJS3628ET	MJS3628ET	3.00" (76.2 mm)	CAM Piston/Spring/Service	68-69		
MJS3630ET	MJS3630ET	3.00" (76.2 mm)	CAM Piston/Spring/Service	68-69		
MJW1216AT	MJW1216AT	1.75" (44.5 mm)	Wedge Piston/Spring/Service	80-81		
MJW1616AT	MJW1616AT	1.75" (44.5 mm)	Wedge Piston/Spring/Service	80-81		
MJW1624BT	MJW1624BT	2.00" (50.8 mm)	Wedge Piston/Spring/Service	82-83		

REMOTE MOUNT CYLINDERS

5004	R4A	4.50" (114.3 mm)	Remote Mount Cylinder	92-93		
5005	R5AHD	4.20" (106.7 mm)	Remote Mount Cylinder	92-93		
5007	R7A	2.75" (69.8 mm)	Spring Applied/Air Released	94-95		
5008	R8H	2.75" (69.8 mm)	Spring Applied/Hydraulic Released	94-95		

AIR DISC BRAKES

16	CSB16D	2.50" (63.5 mm)	Air Disc Service	86		
18	CSB18D	2.50" (63.5 mm)	Air Disc Service	86		
20	CSB20D	3.00" (76.2 mm)	Air Disc Service	86		
22	CSB22D	2.50" (63.5 mm)	Air Disc Service	86		
24	CSB24D	2.50" (63.5 mm)	Air Disc Service	86		
1624	TRB1624DT	2.50" (63.5 mm)	Air Disc/Spring/Service	87		
1824	TRB1824DT	2.50" (63.5 mm)	Air Disc/Spring/Service	87		
2024	TRB2024DT	2.50" (63.5 mm)	Air Disc/Spring/Service	87		
2224	TRB2224DT	2.50" (63.5 mm)	Air Disc/Spring/Service	87		
2424	TRB2424DT	2.50 (63.5 mm)	Air Disc/Spring/Service	87		

NOTE: For Transit/Special Applications (i.e. rod length, etc.,) refer to Section 6.

NOTE: Product information and specifications subject to change without notice. Refer to the MGM Brakes website for latest updated information.

P/N Series	Model	Stroke inch (mm)	Description	Page Number(s)	Obsolete	Replaced By
2430	TRB2430DT	2.50" (63.5 mm)	Air Disc/Spring/Service	87		
1624	MJB1624DT	2.50" (63.5 mm)	Air Disc/Piston/Spring/Service	88		
1824	MJB1824DT	2.50" (63.5 mm)	Air Disc/Piston/Spring/Service	88		
2024	MJB2024DT	2.50" (63.5 mm)	Air Disc/Piston/Spring/Service	88		
2224	MJB2224DT	2.50" (63.5 mm)	Air Disc/Piston/Spring/Service	88		
2424	MJB2424DT	2.50" (63.5 mm)	Air Disc/Piston/Spring/Service	88		

NOTE: For Transit / Special Applications (i.e. rod length, etc.,) refer to Section 6.

UNDERSTANDING MGM BRAKES PART NUMBERS

MGM Brakes assigns a 7 digit part number except Magnum Performance Plus (see below) to every assembly and part we manufacture. This number code reveals information about the part.

EXPLANATION OF 7-DIGIT PART NUMBER

- 1st Two Digits: Major models, groups, detail parts, kits, etc.
- 2nd Two Digits: (a) Model size on major groups
  (b) Detail parts identification all others
- 3rd Three Digits: Numerical sequence 001-999
  (a) Spring brake singles – 001 through 050
  Spring brake tandems – 051 through 999
  (b) All others 001 through 999

MAGNUM PERFORMANCE PLUS NUMBERING SYSTEM

The Magnum "Performance" Plus numbering system is uniquely different from how MGM Brakes identified products in the past. The Magnum Plus part number contains all the information pertaining to the brake, allowing anyone to identify not only the model, but application, stroke, features and serial number as well.

Example: MJS3030ET051

Model Series	Style	Service Side	Spring Side	Max. Stroke	Feature	Serial Number
MJ	**S**	**30**	**30**	**E**	**T**	051
Magnum J-Series	S-Cam	Type 30	Type 30	3.00" (76.2 mm)	Breather Tube	Aftermarket Complete Assembly

AIR DISC NUMBERING SYSTEM

The Air Disc numbering system is uniquely different from how MGM Brakes identified products in the past. The air disc part number contains all the information pertaining to the brake, allowing anyone to identify not only the model, but application, stroke, features and serial number as well.

Example: TRB2424DT051

Model Series	Style	Service Side	Spring Side	Max. Stroke	Feature	Serial Number
TR	**B**	**24**	**24**	**D**	**T**	051
Double Diaphragm	Disc	Type 24	Type 24	2.50" (65 mm)	Breather Tube	Aftermarket Complete Assembly

NOTE: See chart Part Number/Model Designation on page 5 for more key model prefixes and suffixes.

NOTE: Product information and specifications subject to change without notice. Refer to the MGM Brakes website for latest updated information.

S-CAM SERIES

Safe, Reliable, Tamper-Resistant Includes: TR, TR-LP3, LTR, LTS, Piston, and Service Chambers

All TR type 30 and 36 Spring Side Brake Models include Corrosion Fighter Technology.

American Owned · Worldwide · MGM BRAKES · Made in the U.S.A. of Domestic & Imported Parts

Page(s)

Double Diaphragm Spring Brakes 10-35

Corrosion Fighter Technology 16
Industry Safety Reminder 17

Standard Stroke Models

TR	Tamper Resistant	18-19
TR-HD	Tamper Resistant, Heavy-Duty	20-21
TR-HDW	Tamper Resistant, Heavy-Duty, Welded NPC	22-23
TR-T	Tamper Resistant, Tube	24-25
TR-THD	Tamper Resistant, Tube, Heavy-Duty	26-27
TR-THDW	Tamper Resistant, Tube, Heavy-Duty, Welded NPC	28-29
TR-TS	Tamper Resistant, Tube, Severe Service	30-31
TR-TSHD	Tamper Resistant, Tube, Severe Service, Heavy-Duty	32-33
TR-TSHDW	Tamper Resistant, Tube, Severe Service, Heavy-Duty, Welded NPC	34-35

TR

TR-T

TR-TSDW

CORROSION FIGHTER® TECHNOLOGY

All type 30 Spring Side Brake Models include Corrosion Fighter Technology.

NOTE: Product information and specifications subject to change without notice. Refer to the MGM Brakes website for latest updated information.

Page(s)

Double Diaphragm Spring Brakes 36-51

Long Stroke Models

TR-LP3/TR-L3	Tamper Resistant, Long Stroke	36-37
TR-LP3HD	Tamper Resistant, Long Stroke, Heavy-Duty	38-39
TR-LP3T/TR-L3T	Tamper Resistant, Long Stroke, Tube	40-41
TR-LP3THD	Tamper Resistant, Long Stroke, Tube, Heavy-Duty	42-43
TR-LP3THDW	Tamper Resistant, Long Stroke, Tube, Heavy-Duty, Welded NPC	44-45
TR-LP3TS	Tamper Resistant, Long Stroke, Tube, Severe Service	46-47
TR-LP3TSHD	Tamper Resistant, Long Stroke, Tube, Severe Service, Heavy-Duty	48-49
TR-LP3TSHDW	Tamper Resistant, Long Stroke, Tube, Severe Service, Heavy-Duty, Welded NPC	50-51

TR-LP3TSHDW

TR-LP3

TR-LP3T

CORROSION FIGHTER® TECHNOLOGY

NOTE: Product information and specifications subject to change without notice. Refer to the MGM Brakes website for latest updated information.

Page(s)

Long Life Double Diaphragm Spring Brakes 52-59

Standard Stroke Model

LTR-T Integral Release Bolt, Tamper Resistant, Tube 52-53

Long Stroke Model

LTR-L3 Integral Release Bolt, Tamper Resistant, Long Stroke.....54-55

LTR-L3W Integral Release Bolt, Tamper Resistant, Long Stroke, Welded NPC 56-57

LTR-L3T Integral Release Bolt, Tamper Resistant, Long Stroke, Tube.....58-59

LTS Integral Release Bolt, Tamper Resistant, Long Stroke, Tube.....60-61

LTR-T LTR-L3 LTR-L3T LTS

NOTE: Product information and specifications subject to change without notice. Refer to the MGM Brakes website for latest updated information.

Piston Spring Brakes 62-69

Standard Stroke Model

MJS Magnum, J-Series, 1.75” (44.5 mm) Stroke, Tube 62-63

Long Stroke Model

MJS-ET Magnum, J-Series, 3.00” (76.2 mm) Stroke, Tube 64-69

MJS-AT

MJS-ET

Service Chambers 70-75

Standard Stroke Model

C Service Chambers 70-71

Long Stroke Models

CL Service Chambers, Long Stroke 72-73

CS Service Chambers, Long Stroke, Sealed 74-75

C CL CS

• For air disc applications, refer to section 3.

MGM

You Spoke... We Listened...

MGM TR Model Brakes - better than ever!

Commercial vehicle metal components are constantly subjected to harsh corrosive environmental conditions, particularly in the winter months in the northern climates. Until recently, the coatings and materials used in spring brakes were sufficient to effectively resist the corrosive effects of materials found in the environments in which the vehicles operate, including the effects of rock salt used to de-ice the roadways.

However, with the introduction of more aggressive de-icing solutions, which literally "cling" to the surface, metal components are experiencing much higher levels of corrosion. In warmer weather, after the water has evaporated, the corrosion process can be reactivated on rainy days when moisture comes into contact with the crystallized salt deposits.

A way to reduce the effects of this "corrosive" attack is to break the electrical conductivity between the parts by changing one of the existing components to a non-conductive material. This is what MGM Brakes Engineering has done by designing a spring guide constructed from heavy-duty, non-conductive composite material. The composite guide prevents metal to metal contact between the end coil of the power spring and the head of the brake, effectively "breaking the circuit", therefore slowing the corrosion process and reducing "corrosion" related brake failures.

In addition to constructing the guide from composite material, MGM Engineers made other design changes that significantly improve power spring life by preventing damage to the power spring's protective coating. This was accomplished by enlarging the area into which the power spring is compressed when the parking brake is released. All this was done without increasing the overall size of the brake.

Our spring guide also ensures precise alignment of the power spring inside the brake. Accurate alignment of the head side of the power spring compliments our patented Center-Hole Diaphragm (CHD) design providing longer center seal and power spring life.

MGM Spring Brakes are known for their durability and we are proud that our products utilize corrosion resistant materials: such as A360 aluminum, epoxy coating and clear trivalent chromate.

Composite guide
Note: *guide is depicted in orange for visual purposes.*

Old steel guide

Composite Guide - A Standard Feature
Constructed from heavy-duty, non-metallic composite material. Available on all TR - type 30 and 36 spring side model chambers.

CORROSION FIGHTER® TECHNOLOGY

American Owned Worldwide MGM BRAKES Made in the U.S.A. of Domestic & Imported Parts

S-CAM

RUST BUSTER

WWW.MGMBRAKES.COM

INDUSTRY SAFETY REMINDER:

Before 1989 double diaphragm spring brake actuators were manufactured using two clamp bands; one to seal the service side and one to seal the spring parking side. At one time both sides of these units were considered "serviceable", meaning that if either side failed the clamp band could be removed, the diaphragm or other components could be replaced, and the unit continued in service as repaired.

While removing the clamp band on the service side of a double diaphragm spring brake actuator carries little or no risk, experience showed that all too often technicians did not follow the required safety procedures when removing the clamp band on the spring parking side, resulting in a potential for severe personal injury. If the powerful spring in the spring parking side is not properly "caged" before the clamp band is removed the spring can propel components of the assembly with great force, potentially causing severe personal injury.

In response to this safety problem MGM Brakes pioneered the development in 1987 of the "Tamper Resistant" double diaphragm spring brake actuator with the first "non-serviceable" spring parking side. By the early 1990's the entire domestic industry recognized the enhancement to safety offered by the "Tamper Resistant" design. Today every responsible spring brake manufacturer based in the United States offers only spring brakes utilizing a "Tamper Resistant" technology. As a result of the universal adoption of a "Tamper Resistant" design for the spring parking side of double diaphragm spring brake actuators, instances of injury to workers from improper repair procedures or accidents have steadily declined until today they are virtually nonexistent.

Unfortunately, a disturbing trend is emerging within the aftermarket portion of the heavy duty truck industry - the use of double clamp banded spring brake actuators as replacements for damaged or failed "Tamper Resistant" units. This "reintroduction" of double clamp banded spring brakes into the North American market seriously threatens worker safety in the heavy duty truck industry. Especially at risk are those workers least experienced in the industry. Well over a decade has passed since MGM Brakes' introduction of "Tamper Resistant" spring parking brakes and many in the service and maintenance end of the industry have not seen, let alone serviced, a double clamp banded spring brake. Younger workers are not likely to have been trained in the special safety procedures required to cage the spring before servicing the spring parking side of double clamp banded units.

Therefore, MGM Brakes believes the industry needs to be reminded of the dangers associated with servicing double clamp banded spring brakes.

BE SURE TO PROPERLY "CAGE" THE SPRING IN THE SPRING PARKING SIDE ON ALL DOUBLE DIAPHRAGM SPRING BRAKE ACTUATORS - EVEN "TAMPER RESISTANT" MODELS - BEFORE ATTEMPTING ANY SERVICE ON THEM.

DO NOT ATTEMPT TO REMOVE OR LOOSEN THE SPRING PARKING SIDE CLAMP BAND ON A DOUBLE CLAMP BANDED SPRING BRAKE ACTUATOR UNDER ANY CIRCUMSTANCE.

IMPROPER SERVICING OF A DOUBLE CLAMP BANDED SPRING BRAKE ACTUATOR MAY RESULT IN SEVERE PERSONAL INJURY DUE TO AN UNINTENTIONAL SEPARATION OF THE HEAD FROM THE BASE OF THE UNIT.

Double Clamp Band Spring Brake

MGM "TR" Spring Brake

Information taken from technical bulletin EB 06-003.
Reference documents are available on our website: www.mgmbrakes.com

NOTE: Product information and specifications subject to change without notice. Refer to the MGM Brakes website for latest updated information.

Standard Stroke Model

Combination

VMRS# 013-004-000

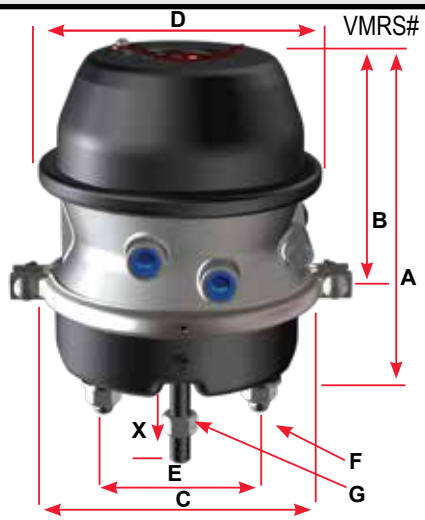

Piggyback Plus Kit

VMRS# 013-004-001

TR Model Features

✓	Tamper Resistant Parking Chamber Design	✓	Center Hole Diaphragms w/Type 30 Spring Side Models
✓	Epoxy Coated Steel Parking Spring Head w/Weatherseal Plug	✓	Corrosion Fighter Composite Spring Guide w/Type 30 & 36 Spring Side Models
✓	A360 Aluminum Center Case w/Release Bolt Storage Pocket		Heavy Duty "Long Life" Power Spring w/Additional Parking Force
✓	Low Friction Internal Push-Rod Polymer Guide w/Nitrile Rubber Air Seal		Reinforced Non-Pressure Chamber Housing w/Welded Mounting Bolts
✓	Epoxy Coated Return & Power Springs		External Breather Tube
✓	Epoxy Coated Heavy-Duty Steel Non-Pressure Chamber Housing		3 inch (76.2 mm) Long Stroke Increases Safety
✓	Epoxy Coated External Piston Rod w/Stroke Alert and Stone Shield		Epoxy Coated Center Case (Inside & Out)
✓	Heavy Duty Reinforced Diaphragms (Oil Resistant Options Available)		

P/N Series	3420	3427	3429	3430	3433	3437
Model	TR2024	TR2424L	TR2430L	TR3030	TR3036	TR3636
Size	2024	2424	2430	3030	3036	3636
Stroke	2.25" (57.2 mm)	2.50" (63.5 mm)	2.50" (63.5 mm)	2.50" (63.5 mm)	2.50" (63.5 mm)	3.00" (76.2 mm)
P/N Combination SAE	3420051	3427051	3429051	3430051	3433051	3437051
P/N Combination 12" Rod*	N/A	3427551*	3429551*	3430551*	N/A	3437551*
P/N Combination 18" Rod*	N/A	N/A	3429651*	3430651*	N/A	3437651*
P/N Neoprene Diaphragm	N/A	3427851	N/A	3430851	3433851	N/A
P/N Welded Yoke (2.25")	N/A	N/A	N/A	3430951	3433951	3437951
P/N Piggyback Plus Kit SAE	3420008	3427008	3429008	3430008	3433008(a)	3437008
P/N Combination METRIC	N/A	3427049	3429049	3430049	N/A	N/A
Wt. Combination	15.9 lb (7.2 kg)	16.6 lb (7.5 kg)	18.2 lb (8.3 kg)	19.4 lb (8.8 kg)	26.5 lb (12.0 kg)	30.8 lb (14.0 kg)
Wt. Single	9.6 lb (4.4 kg)	9.5 lb (4.3 kg)	11.3 lb (5.1 kg)	11.3 lb (5.1 kg)	18.3 lb (8.3 kg)	20.2 lb (9.2 kg)
A	8.34" (211.8 mm)	8.52" (216.4 mm)	8.99" (228.4 mm)	9.04" (229.6 mm)	9.90" (251.5 mm)	11.08" (281.5 mm)
B	6.18" (157.0 mm)	6.40" (162.6 mm)	6.87" (174.5 mm)	6.71" (170.4 mm)	7.54" (191.5 mm)	8.39" (213.1 mm)
C	6.72" (170.6 mm)	7.19" (182.7 mm)	7.19" (182.7 mm)	8.32" (211.3 mm)	8.32" (211.3 mm)	9.24" (234.6 mm)
D	7.34" (186.4 mm)	7.34" (186.4 mm)	8.21" (208.5 mm)	8.21" (208.5 mm)	9.18" (233.2 mm)	9.18" (233.2 mm)
E	4.75" (120.7 mm)					
F	5/8" - 11 UNC (M16 x 1.5 - 6g)					
G	5/8" - 18 UNF (M16 x 1.5 - 6g)					
Inlets	3/8" - 18 NPTF (M16 x 1.5 - 6H)					
X - Min. (in the caged position)	8.00" (203.2 mm)					

* For Transit, Hendrickson Intraax/Vantraax Suspension applications. P/N's ending in XXXX651 have 3/4" push-rod.
(a) This model must be used with MGM Brakes heavy-duty weld reinforced mounting base or 8-gauge non-pressure housing.

NOTE: Product information and specifications subject to change without notice. Refer to the MGM Brakes website for latest updated information.

Standard Stroke Model

Replacement Parts							
	P/N Series	3420051	3427051	3429051	3430051	3433051	3437051
	Model	TR2024	TR2424L	TR2430L	TR3030	TR3036	TR3636
1	Kit - NP Chamber (a)	9015160	9015047	9015047	9015050	9015050	9015049
2	Kit - Nuts & Bolts	9003001	9003001	9003001	9003001	9003001	9003001
3	Clamp Band Assembly	8216020	8216025	8216025	8216045	8216045	8216036
4	Diaphragm	8017120	8017141	8017141	8017730	8017730	8017836
5	Kit - Push-Rod Assembly (a) SAE	9064001	9064002	9064002	9064003	9064003	9064004
5a	Kit - Push-Rod Assembly (a) METRIC	9064015	9064016	9064016	9064035	9064035	9064009
6	Return Spring	8068002	8068002	8068002	8068002	8068002	8068012
7	Kit - Center Hole Shield	9065002	9065002	9065002	9065002	9065002	9065002
8	NP Chamber Assembly (a)	8215169	8215026	8215026	8215501	8215501	8215036
9	Kit - Nuts & Washers SAE	9002001	9002001	9002001	9002001	9002001	9002001
9a	Kit - Nuts & Washers METRIC	9002002	9002002	9002002	9002002	9002002	9002002
10	Hex Nut - Yoke SAE	8130004	8130004	8130004	8130004	8130004	8130004
10a	Hex Nut - Yoke METRIC	8130016	8130016	8130016	8130016	8130016	8130016
11	Kit - Weatherseal™ Plug	9019005	9019005	9019005	9019005	9019006	9019006
12	Kit - Release Bolt	9007003	9007003	9007003	9007003	9007009	9007009
13	Kit - Piggyback Plus SAE	3420008	3427008	3429008	3430008	3433008(b)	3437008
	OPTIONAL ITEMS - For additional replacement parts, refer to Section 9						
	Yoke Assembly	For additional replacement parts, refer to Section 9					
	Boot & Retainer	For additional replacement parts, refer to Section 9					

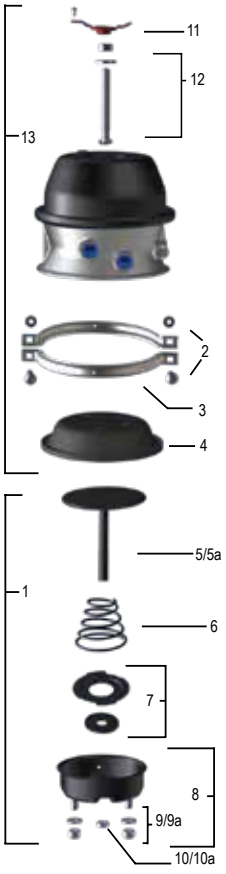

NOTE: (a) To ensure correct stroke alert positioning, these kits must be used only on the designated MGM Brake units.
(b) This model must be used with MGM Brakes heavy-duty weld reinforced mounting base or 8 - gauge non-pressure housing.

Center Seal (Push-Rod Air Seal)
Multi-lipped, pressure activated seal – an MGM exclusive - molded from specially formulated low-temperature-resistant Nitrile Rubber, providing long-term protection against air leaks. Nylon guides eliminate metal to metal contact and premature failure in this critical area.

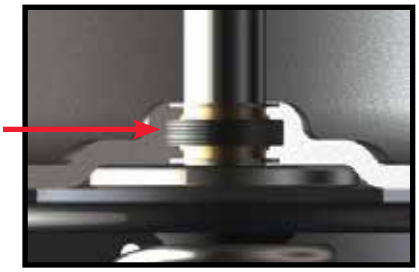

Welded Yoke Chamber

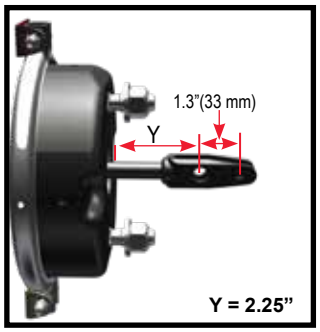

For more welded yoke choices, see page 104-105

NOTE: Product information and specifications subject to change without notice. Refer to the MGM Brakes website for latest updated information.

Standard Stroke Model

Combination

VMRS# 013-004-000

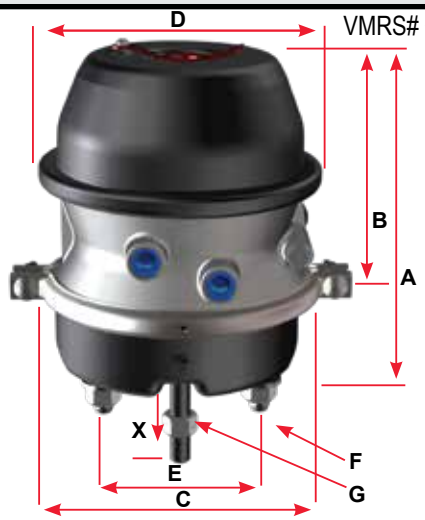

Piggyback Plus Kit

VMRS# 013-004-001

TR-HD Model Features

✓	Tamper Resistant Parking Chamber Design	✓	Center Hole Diaphragms w/Type 30 Spring Side Models
✓	Epoxy Coated Steel Parking Spring Head w/Weatherseal Plug	✓	Corrosion Fighter Composite Spring Guide w/Type 30 & 36 Spring Side Models
✓	A360 Aluminum Center Case w/Release Bolt Storage Pocket	✓	Heavy Duty "Long Life" Power Spring w/Additional Parking Force
✓	Low Friction Internal Push-Rod Polymer Guide w/Nitrile Rubber Air Seal		Reinforced Non-Pressure Chamber Housing w/Welded Mounting Bolts
✓	Epoxy Coated Return & Power Springs		External Breather Tube
✓	Epoxy Coated Heavy-Duty Steel Non-Pressure Chamber Housing		3 inch (76.2 mm) Long Stroke Increases Safety
✓	Epoxy Coated External Piston Rod w/Stroke Alert and Stone Shield		Epoxy Coated Center Case (Inside & Out)
✓	Heavy Duty Reinforced Diaphragms (Oil Resistant Options Available)		

P/N Series	3624	3630
Model	TR2430LHD	TR3030HD
Size	2430	3030
Stroke	2.50" (63.5 mm)	2.50" (63.5 mm)
P/N Combination SAE	3624051	3630051
P/N Combination 12" Rod*	3624551*	N/A
P/N Combination 18" Rod*	N/A	N/A
P/N Neoprene Diaphragm	N/A	3630851
P/N Welded Yoke (2.25")	3624951	N/A
P/N Piggyback Plus Kit SAE	3624008	3630008
P/N Combination METRIC	3624049	3630049
Wt. Combination	18.6 lb (8.4 kg)	19.9 lb (9.0 kg)
Wt. Single	11.7 lb (5.3 kg)	11.5 lb (5.2 kg)
A	8.99" (228.4 mm)	9.04" (229.6 mm)
B	6.87" (174.5 mm)	6.71" (170.4 mm)
C	7.19" (182.7 mm)	8.32" (211.3 mm)
D	8.21" (208.5 mm)	8.21" (208.5 mm)
E	4.75" (120.7 mm)	
F	5/8" - 11 UNC (M16 x 1.5 - 6g)	
G	5/8" - 18 UNF (M16 x 1.5 - 6g)	
Inlets	3/8" - 18 NPTF (M16 x 1.5 - 6H)	
X - Min. (in the caged position)	8.00" (203.2 mm)	

* For Transit, Hendrickson Intraax/Vantraax Suspension applications. P/N's ending in XXXX651 have 3/4" push-rod.

NOTE: Product information and specifications subject to change without notice. Refer to the MGM Brakes website for latest updated information.

Standard Stroke Model

Replacement Parts			
	P/N Series	3624051	3630051
	Model	TR2430LHD	TR3030HD
1	Kit - NP Chamber (a)	9015047	9015050
2	Kit - Nuts & Bolts	9003001	9003001
3	Clamp Band Assembly	8216025	8216045
4	Diaphragm	8017141	8017730
5	Kit - Push-Rod Assembly (a) SAE	9064002	9064003
5a	Kit - Push-Rod Assembly (a) METRIC	9064016	9064035
6	Return Spring	8068002	8068002
7	Kit - Center Hole Shield	9065002	9065002
8	NP Chamber Assembly (a)	8215026	8215501
9	Kit - Nuts & Washers SAE	9002001	9002001
9a	Kit - Nuts & Washers METRIC	9002002	9002002
10	Hex Nut - Yoke SAE	8130004	8130004
10a	Hex Nut - Yoke METRIC	8130016	8130016
11	Kit - Weatherseal™ Plug	9019005	9019005
12	Kit - Release Bolt	9007003	9007003
13	Kit - Piggyback Plus SAE	3624008	3630008
OPTIONAL ITEMS - For additional replacement parts, refer to Section 9			
	Yoke Assembly	For additional replacement parts, refer to Section 9	
	Boot & Retainer	For additional replacement parts, refer to Section 9	

NOTE: (a) To ensure correct stroke alert positioning, these kits must be used only on the designated MGM Brake units.

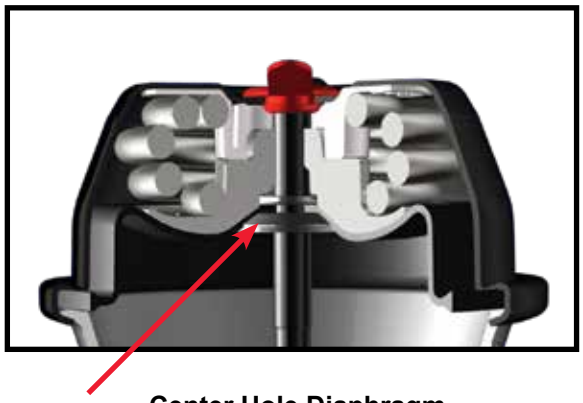

Center Hole Diaphragm

Patented feature that aligns the piston, diaphragm, power spring and internal push-rod providing the following advantages: Maintains component alignment; reduces power spring stress; reduces coil clash; increases center-seal life and eliminates the effects of severe vibration.

NOTE: Product information and specifications subject to change without notice. Refer to the MGM Brakes website for latest updated information.

Standard Stroke Model

Combination	Piggyback Plus Kit
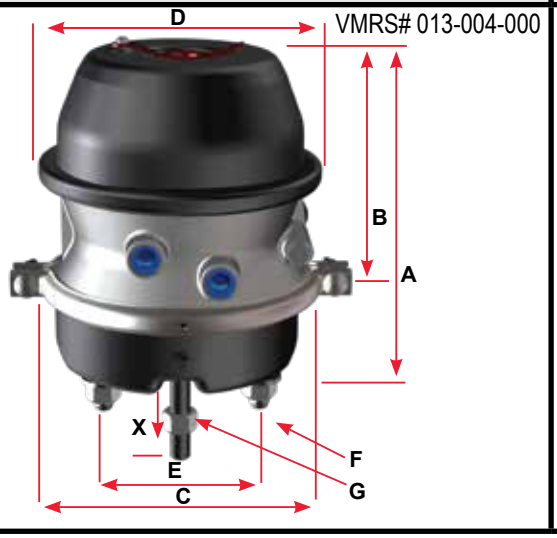	N/A

TR-HDW Model Features

✓	Tamper Resistant Parking Chamber Design	✓	Center Hole Diaphragms w/Type 30 Spring Side Models
✓	Epoxy Coated Steel Parking Spring Head w/Weatherseal Plug	✓	Corrosion Fighter Composite Spring Guide w/Type 30 & 36 Spring Side Models
✓	A360 Aluminum Center Case w/Release Bolt Storage Pocket	✓	Heavy Duty "Long Life" Power Spring w/Additional Parking Force
✓	Low Friction Internal Push-Rod Polymer Guide w/Nitrile Rubber Air Seal	✓	Reinforced Non-Pressure Chamber Housing w/Welded Mounting Bolts
✓	Epoxy Coated Return & Power Springs		External Breather Tube
✓	Epoxy Coated Heavy-Duty Steel Non-Pressure Chamber Housing		3 inch (76.2 mm) Long Stroke Increases Safety
✓	Epoxy Coated External Piston Rod w/Stroke Alert and Stone Shield		Epoxy Coated Center Case (Inside & Out)
✓	Heavy Duty Reinforced Diaphragms (Oil Resistant Options Available)		

P/N Series	3443
Model	TR3030HDW
Size	3030
Stroke	2.50" (63.5 mm)
P/N Combination SAE	3443051
P/N Combination 12" Rod*	3443551*
P/N Combination 18" Rod*	N/A
P/N Neoprene Diaphragm	3443851
P/N Welded Yoke (2.25")	N/A
P/N Piggyback Plus Kit SAE	N/A
P/N Combination METRIC	3443049
Wt. Combination	19.9 lb (9.0 kg)
Wt. Single	N/A
A	9.04" (229.6 mm)
B	6.71" (170.4 mm)
C	8.32" (211.3 mm)
D	8.21" (208.5 mm)
E	4.75" (120.7 mm)
F	5/8" - 11 UNC (M16 x 1.5 - 6g)
G	5/8" - 18 UNF (M16 x 1.5 - 6g)
Inlets	3/8" - 18 NPTF (M16 x 1.5 - 6H)
X - Min. (in the caged position)	8.00" (203.2 mm)

* For Transit, Hendrickson Intraax/Vantraax Suspension applications. P/N's ending in XXXX651 have 3/4" push-rod.

NOTE: Product information and specifications subject to change without notice. Refer to the MGM Brakes website for latest updated information.

Standard Stroke Model

Replacement Parts		
	P/N Series	3443051
	Model	TR3030HDW
1	Kit - NP Chamber (a)	9015905
2	Kit - Nuts & Bolts	9003001
3	Clamp Band Assembly	8216045
4	Diaphragm	8017730
5	Kit - Push-Rod Assembly (a) SAE	9064003
5a	Kit - Push-Rod Assembly (a) METRIC	9064035
6	Return Spring	8068002
7	Kit - Center Hole Shield	9065002
8	NP Chamber Assembly (a)	9015259
9	Kit - Nuts & Washers SAE	9002001
9a	Kit - Nuts & Washers METRIC	9002002
10	Hex Nut - Yoke SAE	8130004
10a	Hex Nut - Yoke METRIC	8130016
11	Kit - Weatherseal™ Plug	9019005
12	Kit - Release Bolt	9007003
OPTIONAL ITEMS - For additional replacement parts, refer to Section 9		
	Yoke Assembly	For additional replacement parts, refer to Section 9
	Boot & Retainer	For additional replacement parts, refer to Section 9

NOTE: (a) To ensure correct stroke alert positioning, these kits must be used only on the designated MGM Brake units.

Weld Reinforced Non-Pressure Housing

Heavy-gauge formed steel flat-bottom design, epoxy coated for total corrosion protection and "weld-reinforced" mounting studs for added support in extreme vibration applications. (bolt actually epoxy coated - depicted here lighter for visual purposes)

NOTE: Product information and specifications subject to change without notice. Refer to the MGM Brakes website for latest updated information.

Standard Stroke Model

Combination

VMRS# 013-004-000

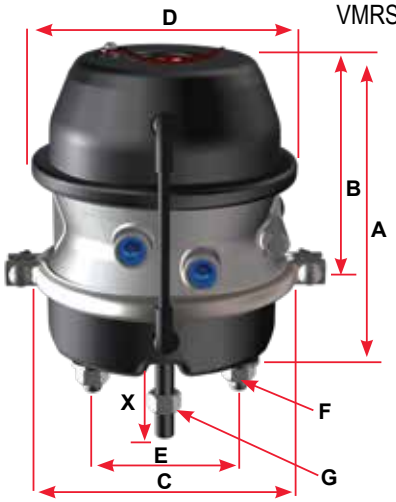

Piggyback Plus Kit

VMRS# 013-004-001

TR-T Model Features

✓	Tamper Resistant Parking Chamber Design	✓	Center Hole Diaphragms w/Type 30 Spring Side Models
✓	Epoxy Coated Steel Parking Spring Head w/Weatherseal Plug	✓	Corrosion Fighter Composite Spring Guide w/Type 30 & 36 Spring Side Models
✓	A360 Aluminum Center Case w/Release Bolt Storage Pocket		Heavy Duty "Long Life" Power Spring w/Additional Parking Force
✓	Low Friction Internal Push-Rod Polymer Guide w/Nitrile Rubber Air Seal		Reinforced Non-Pressure Chamber Housing w/Welded Mounting Bolts
✓	Epoxy Coated Return & Power Springs	✓	External Breather Tube
✓	Epoxy Coated Heavy-Duty Steel Non-Pressure Chamber Housing		3 inch (76.2 mm) Long Stroke Increases Safety
✓	Epoxy Coated External Piston Rod w/Stroke Alert and Stone Shield		Epoxy Coated Center Case (Inside & Out)
✓	Heavy Duty Reinforced Diaphragms (Oil Resistant Options Available)		

P/N Series	3421	3426	3428	3431	3432	3436
Model	TR2024T	TR2424LT	TR2430LT	TR3030T	TR3036T	TR3636T
Size	2024	2424	2430	3030	3036	3636
Stroke	2.25" (57.2 mm)	2.50" (63.5 mm)	2.50" (63.5 mm)	2.50" (63.5 mm)	2.50" (63.5 mm)	3.00" (76.2mm)
P/N Combination SAE	3421051	3426051	3428051	3431051	3432051	3436051
P/N Combination 12" Rod*	N/A	N/A	3428551*	3431551*	N/A	3436551*
P/N Combination 18" Rod*	N/A	N/A	3428651*	3431651*	N/A	3436651*
P/N Neoprene Diaphragm	N/A	N/A	3428851	3431851	3432851	3436851
P/N Welded Yoke (2.25")	N/A	N/A	3428951	3431951	3432951	3436951
P/N Piggyback Plus Kit SAE	N/A	N/A	3428008	3431008	3432008 (b)	3436008
P/N Combination METRIC	3421049	3426049	3428049	3431049	N/A	3436049
Wt. Combination	15.9 lb (7.2 kg)	16.6 lb (7.5 kg)	18.2 lb (8.3 kg)	19.4 lb (8.8 kg)	26.5 lb (12.0 kg)	30.8 lb (14.0 kg)
Wt. Single	N/A	N/A	11.3 lb (5.1 kg)	11.3 lb (5.1 kg)	18.3 lb (8.3 kg)	20.2 lb (9.2 kg)
A	8.34" (211.8 mm)	8.52" (216.4 mm)	8.99" (228.4 mm)	9.04" (229.6 mm)	9.90" (251.5 mm)	11.08" (281.5 mm)
B	6.18" (157.0 mm)	6.40" (162.6 mm)	6.87" (174.5 mm)	6.71" (170.4 mm)	7.54" (191.5 mm)	8.39" (213.1 mm)
C	6.72" (170.6 mm)	7.19" (182.7 mm)	7.19" (182.7 mm)	8.32" (211.3 mm)	8.32" (211.3 mm)	9.24" (234.6 mm)
D	7.34" (186.4 mm)	7.34" (186.4 mm)	8.21" (208.5 mm)	8.21" (208.5 mm)	9.18" (233.2 mm)	9.18" (233.2 mm)
E	4.75" (120.7 mm)					
F	5/8" - 11 UNC (M16 x 1.5 - 6g)					
G	5/8" - 18 UNF (M16 x 1.5 - 6g)					
Inlets	3/8" - 18 NPTF (M16 x 1.5 - 6H)					
X - Min. (in the caged position)	8.00" (203.2 mm)					

* For Transit, Hendrickson Intraax/Vantraax Suspension applications. P/N's ending in XXXX651 have 3/4" push-rod.
(b) This model must be used with MGM Brakes heavy-duty weld reinforced mounting base or 8 - gauge non-pressure housing.

NOTE: Product information and specifications subject to change without notice. Refer to the MGM Brakes website for latest updated information.

Standard Stroke Model

Replacement Parts							
	P/N Series	3421051	3426051	3428051	3431051	3432051	3436051
	Model	TR2024T	TR2424LT	TR2430LT	TR3030T	TR3036T	TR3636T
1	Kit - NP Chamber (a)	9015111	9015152	9015152	9015157	9015149	9015150
2	Kit - Nuts & Bolts	9003001	9003001	9003001	9003001	9003001	9003001
3	Clamp Band Assembly	8216020	8216025	8216025	8216045	8216045	8216036
4	Diaphragm	8017120	8017141	8017141	8017730	8017730	8017836
5	Kit - Push-Rod Assembly (a) SAE	9064001	9064002	9064002	9064003	9064003	9064004
5a	Kit - Push-Rod Assembly (a) METRIC	9064015	9064016	9064016	9064035	9064035	9064009
6	Return Spring	8068002	8068002	8068002	8068002	8068002	8068012
7	Kit - Center Hole Shield	9065002	9065002	9065002	9065002	9065002	9065002
8	NP Chamber Assembly (a)	9015110	9015151	9015151	9015122	9015122	9015108
9	Kit - Nuts & Washers SAE	9002001	9002001	9002001	9002001	9002001	9002001
9a	Kit - Nuts & Washers METRIC	9002002	9002002	9002002	9002002	9002002	9002002
10	Hex Nut - Yoke SAE	8130004	8130004	8130004	8130004	8130004	8130004
10a	Hex Nut - Yoke METRIC	8130016	8130016	8130016	8130016	8130016	8130016
11	Kit - Weatherseal™ Plug	9019005	9019005	9019005	9019005	9019006	9019006
12	Kit - Release Bolt	9007003	9007003	9007003	9007003	9007009	9007009
13	Kit - Breather Tube	9081001	9081001	9081001	9081001	9081001	9081001
14	Kit - Piggyback Plus SAE	N/A	N/A	3428008	3431008	3432008 (b)	3436008
OPTIONAL ITEMS - For additional replacement parts, refer to Section 9							
	Yoke Assembly	For additional replacement parts, refer to Section 9					
	Boot & Retainer	For additional replacement parts, refer to Section 9					

NOTE: (a) To ensure correct stroke alert positioning, these kits must be used only on the designated MGM Brake units.
(b) This model must be used with MGM Brakes heavy-duty weld reinforced mounting base or 8 - gauge non-pressure housing.

External Breather-Tube
Vents air from inside the protected area of the non-pressure chamber to effectively prevent entry of liquid and solid corrosive contaminants that can cause premature failure of the spring brake chamber.

Welded Yoke Chamber

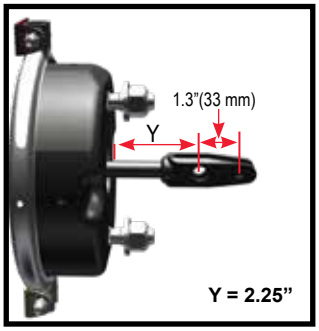

For more welded yoke choices, see page 104-105

NOTE: Product information and specifications subject to change without notice. Refer to the MGM Brakes website for latest updated information.

Standard Stroke Model

Combination

VMRS# 013-004-000

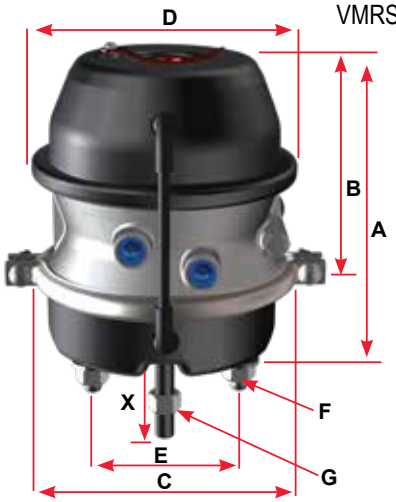

Piggyback Plus Kit

VMRS# 013-004-001

TR-THD Model Features

✓	Tamper Resistant Parking Chamber Design	✓	Center Hole Diaphragms w/Type 30 Spring Side Models
✓	Epoxy Coated Steel Parking Spring Head w/Weatherseal Plug	✓	Corrosion Fighter Composite Spring Guide w/Type 30 & 36 Spring Side Models
✓	A360 Aluminum Center Case w/Release Bolt Storage Pocket	✓	Heavy Duty "Long Life" Power Spring w/Additional Parking Force
✓	Low Friction Internal Push-Rod Polymer Guide w/Nitrile Rubber Air Seal		Reinforced Non-Pressure Chamber Housing w/Welded Mounting Bolts
✓	Epoxy Coated Return & Power Springs	✓	External Breather Tube
✓	Epoxy Coated Heavy-Duty Steel Non-Pressure Chamber Housing		3 inch (76.2 mm) Long Stroke Increases Safety
✓	Epoxy Coated External Piston Rod w/Stroke Alert and Stone Shield		Epoxy Coated Center Case (Inside & Out)
✓	Heavy Duty Reinforced Diaphragms (Oil Resistant Options Available)		

P/N Series	3625	3631
Model	TR2430LTHD	TR3030THD
Size	2430	3030
Stroke	2.50" (63.5 mm)	2.50" (63.5 mm)
P/N Combination SAE	3625051	3631051
P/N Combination 12" Rod*	3625551*	3631551*
P/N Combination 18" Rod*	3625651*	N/A
P/N Neoprene Diaphragm	N/A	N/A
P/N Welded Yoke (2.25")	3625951	3631951
P/N Piggyback Plus Kit SAE	3625008	3631008
P/N Combination METRIC	3625049	3631049
Wt. Combination	18.6 lb (8.4 kg)	19.9 lb (9.0 kg)
Wt. Single	11.7 lb (5.3 kg)	11.5 lb (5.2 kg)
A	8.99" (228.4 mm)	9.04" (229.6 mm)
B	6.87" (174.5 mm)	6.71" (170.4 mm)
C	7.19" (182.7 mm)	8.32" (211.3 mm)
D	8.21" (208.5 mm)	8.21" (208.5 mm)
E	4.75" (120.7 mm)	
F	5/8" - 11 UNC (M16 x 1.5 - 6g)	
G	5/8" - 18 UNF (M16 x 1.5 - 6g)	
Inlets	3/8" - 18 NPTF (M16 x 1.5 - 6H)	
X - Min. (in the caged position)	8.00" (203.2 mm)	

* For Transit, Hendrickson Intraax/Vantraax Suspension applications. P/N's ending in XXXX651 have 3/4" push-rod.

Welded Yoke Chamber

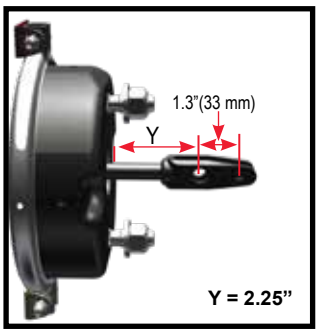

For more welded yoke choices, see page 104-105

NOTE: Product information and specifications subject to change without notice. Refer to the MGM Brakes website for latest updated information.

Standard Stroke Model

Replacement Parts			
	P/N Series	3625051	3631051
	Model	TR2430LTHD	TR3030THD
1	Kit - NP Chamber (a)	9015152	9015149
2	Kit - Nuts & Bolts	9003001	9003001
3	Clamp Band Assembly	8216025	8216045
4	Diaphragm	8017141	8017730
5	Kit - Push-Rod Assembly (a) SAE	9064002	9064003
5a	Kit - Push-Rod Assembly (a) METRIC	9064016	9064035
6	Return Spring	8068002	8068002
7	Kit - Center Hole Shield	9065002	9065002
8	NP Chamber Assembly (a)	9015151	9015122
9	Kit - Nuts & Washers SAE	9002001	9002001
9a	Kit - Nuts & Washers METRIC	9002002	9002002
10	Hex Nut - Yoke SAE	8130004	8130004
10a	Hex Nut - Yoke METRIC	8130016	8130016
11	Kit - Weatherseal™ Plug	9019005	9019005
12	Kit - Release Bolt	9007003	9007003
13	Kit - Breather Tube	9081001	9081001
14	Piggyback Plus Kit SAE	3625008	3631008
OPTIONAL ITEMS - For additional replacement parts, refer to Section 9			
	Yoke Assembly	For additional replacement parts, refer to Section 9	
	Boot & Retainer	For additional replacement parts, refer to Section 9	

NOTE: (a) To ensure correct stroke alert positioning, these kits must be used only on the designated MGM Brake units.

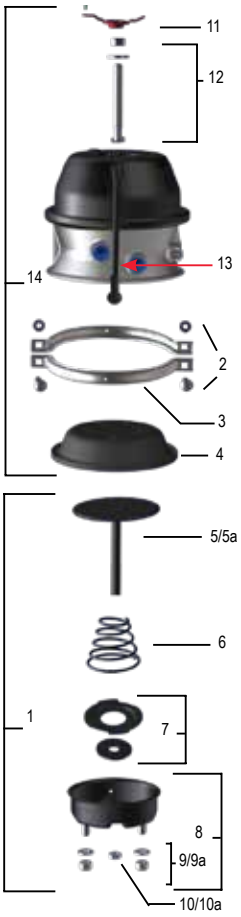

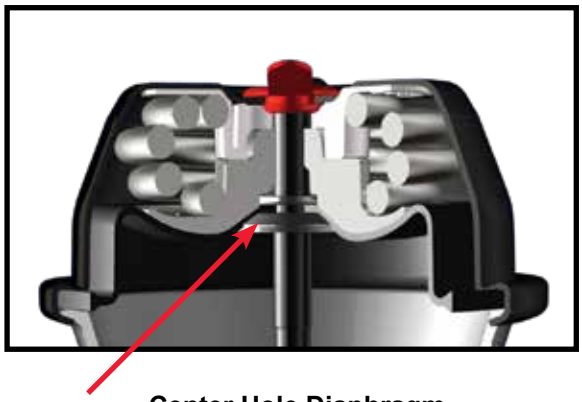

Center Hole Diaphragm

Patented feature that aligns the piston, diaphragm, power spring and internal push-rod providing the following advantages: Maintains component alignment; reduces power spring stress; reduces coil clash; increases center-seal life and eliminates the effects of severe vibration.

NOTE: Product information and specifications subject to change without notice. Refer to the MGM Brakes website for latest updated information.

Standard Stroke Model

Combination	Piggyback Plus Kit
VMRS# 013-004-000 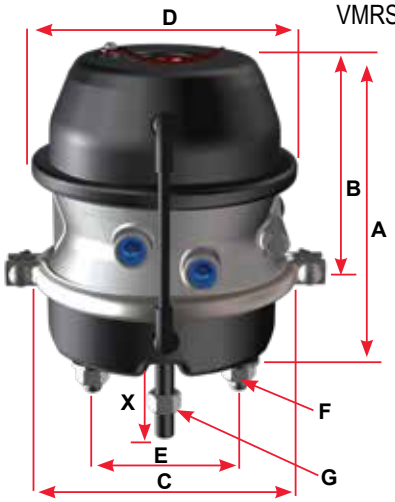	N/A

TR-THDW Model Features

✓	Tamper Resistant Parking Chamber Design	✓	Center Hole Diaphragms w/Type 30 Spring Side Models
✓	Epoxy Coated Steel Parking Spring Head w/Weatherseal Plug	✓	Corrosion Fighter Composite Spring Guide w/Type 30 & 36 Spring Side Models
✓	A360 Aluminum Center Case w/Release Bolt Storage Pocket	✓	Heavy Duty "Long Life" Power Spring w/Additional Parking Force
✓	Low Friction Internal Push-Rod Polymer Guide w/Nitrile Rubber Air Seal	✓	Reinforced Non-Pressure Chamber Housing w/Welded Mounting Bolts
✓	Epoxy Coated Return & Power Springs	✓	External Breather Tube
✓	Epoxy Coated Heavy-Duty Steel Non-Pressure Chamber Housing		3 inch (76.2 mm) Long Stroke Increases Safety
✓	Epoxy Coated External Piston Rod w/Stroke Alert and Stone Shield		Epoxy Coated Center Case (Inside & Out)
✓	Heavy Duty Reinforced Diaphragms (Oil Resistant Options Available)		

P/N Series	3444
Model	TR3030THDW
Size	3030
Stroke	2.50" (63.5 mm)
P/N Combination SAE	3444051
P/N Combination 12" Rod*	N/A
P/N Combination 18" Rod*	N/A
P/N Neoprene Diaphragm	3444851
P/N Welded Yoke (2.25")	N/A
P/N Piggyback Plus Kit SAE	N/A
P/N Combination METRIC	3444049
Wt. Combination	19.9 lb (9.0 kg)
Wt. Single	N/A
A	9.04" (229.6 mm)
B	6.71" (170.4 mm)
C	8.32" (211.3 mm)
D	8.21" (208.5 mm)
E	4.75" (120.7 mm)
F	5/8" - 11 UNC (M16 x 1.5 - 6g)
G	5/8" - 18 UNF (M16 x 1.5 - 6g)
Inlets	3/8" - 18 NPTF (M16 x 1.5 - 6H)
X - Min. (in the caged position)	8.00" (203.2 mm)

* For Transit, Hendrickson Intraax/Vantraax Suspension applications. P/N's ending in XXXX651 have 3/4" push-rod.

NOTE: Product information and specifications subject to change without notice. Refer to the MGM Brakes website for latest updated information.

Standard Stroke Model

Replacement Parts		
	P/N Series	3444051
	Model	TR3030THDW
1	Kit - NP Chamber (a)	9015905
2	Kit - Nuts & Bolts	9003001
3	Clamp Band Assembly	8216045
4	Diaphragm	8017730
5	Kit - Push-Rod Assembly (a) SAE	9064003
5a	Kit - Push-Rod Assembly (a) METRIC	9064035
6	Return Spring	8068002
7	Kit - Center Hole Shield	9065002
8	NP Chamber Assembly (a)	9015259
9	Kit - Nuts & Washers SAE	9002001
9a	Kit - Nuts & Washers METRIC	9002002
10	Hex Nut - Yoke SAE	8130004
10a	Hex Nut - Yoke METRIC	8130016
11	Kit - Weatherseal™ Plug	9019005
12	Kit - Release Bolt	9007003
13	Kit - Breather Tube	9081001
OPTIONAL ITEMS - For additional replacement parts, refer to Section 9		
	Yoke Assembly	For additional replacement parts, refer to Section 9
	Boot & Retainer	For additional replacement parts, refer to Section 9

NOTE: (a) To ensure correct stroke alert positioning, these kits must be used only on the designated MGM Brake units.

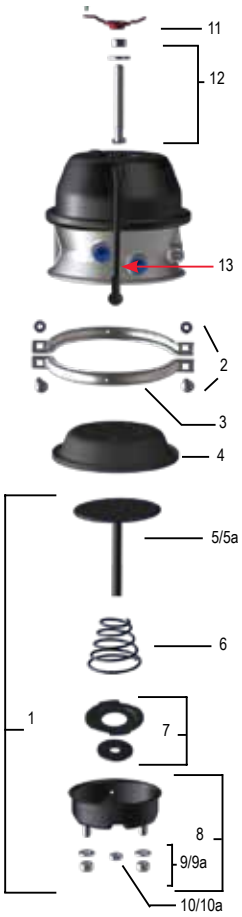

Weld Reinforced Non-Pressure Housing

Heavy-gauge formed steel flat-bottom design, epoxy coated for total corrosion protection and "weld-reinforced" mounting studs for added support in extreme vibration applications. (bolt actually epoxy coated - depicted here lighter for visual purposes)

NOTE: Product information and specifications subject to change without notice. Refer to the MGM Brakes website for latest updated information.

Standard Stroke Model

Combination	Piggyback Plus Kit
VMRS# 013-004-000 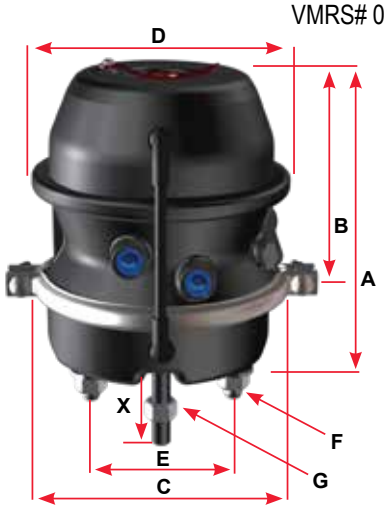	N/A

TR-TS Model Features

✓	Tamper Resistant Parking Chamber Design	✓	Center Hole Diaphragms w/Type 30 Spring Side Models
✓	Epoxy Coated Steel Parking Spring Head w/Weatherseal Plug		Corrosion Fighter Composite Spring Guide w/Type 30 & 36 Spring Side Models
✓	A360 Aluminum Center Case w/Release Bolt Storage Pocket	✓	Heavy Duty "Long Life" Power Spring w/Additional Parking Force
✓	Low Friction Internal Push-Rod Polymer Guide w/Nitrile Rubber Air Seal		Reinforced Non-Pressure Chamber Housing w/Welded Mounting Bolts
✓	Epoxy Coated Return & Power Springs	✓	External Breather Tube
✓	Epoxy Coated Heavy-Duty Steel Non-Pressure Chamber Housing		3 inch (76.2 mm) Long Stroke Increases Safety
✓	Epoxy Coated External Piston Rod w/Stroke Alert and Stone Shield	✓	Epoxy Coated Center Case (Inside & Out)
✓	Heavy Duty Reinforced Diaphragms (Oil Resistant Options Available)		

P/N Series	3538	3528	3531	3532	3536
Model	TR2424LTS	TR2430LTS	TR3030TS	TR3036TS	TR3636TS
Size	2424	2430	3030	3036	3636
Stroke	2.50" (63.5 mm)	2.50" (63.5 mm)	2.50" (63.5 mm)	2.50" (63.5 mm)	3.00" (76.2 mm)
P/N Combination SAE	3538051	3528051	3531051	3532051	3536051
P/N Combination 12" Rod*	N/A	3528551*	3531551*	N/A	3536551*
P/N Combination 18" Rod*	N/A	3528651*	3531651*	N/A	3536651*
P/N Neoprene Diaphragm	N/A	N/A	3531851	3532851	N/A
P/N Welded Yoke (2.25")	N/A	N/A	3531951	3532951	N/A
P/N Piggyback Plus Kit SAE	N/A	N/A	N/A	N/A	N/A
P/N Combination METRIC	3538049	3528049	3531049	N/A	N/A
Wt. Combination	16.6 lb (7.5 kg)	18.2 lb (8.3 kg)	19.4 lb (8.8 kg)	26.5 lb (12.0 kg)	30.8 lb (14.0 kg)
Wt. Single	N/A	N/A	N/A	N/A	N/A
A	8.52" (216.4 mm)	8.99" (228.4 mm)	9.04" (229.6 mm)	9.90" (251.5 mm)	11.08" (281.5 mm)
B	6.40" (162.6 mm)	6.87" (174.5 mm)	6.71" (170.4 mm)	7.54" (191.5 mm)	8.39" (213.1 mm)
C	7.19" (182.7 mm)	7.19" (182.7 mm)	8.32" (211.3 mm)	8.32" (211.3 mm)	9.24" (234.6 mm)
D	7.34" (186.4 mm)	8.21" (208.5 mm)	8.21" (208.5 mm)	9.18" (233.2 mm)	9.18" (233.2 mm)
E	4.75" (120.7 mm)				
F	5/8" - 11 UNC (M16 x 1.5 - 6g)				
G	5/8" - 18 UNF (M16 x 1.5 - 6g)				
Inlets	3/8" - 18 NPTF (M16 x 1.5 - 6H)				
X - Min. (in the caged position)	8.00" (203.2 mm)				

* For Transit, Hendrickson Intraax/Vantraax Suspension applications. P/N's ending in XXXX651 have 3/4" push-rod.

NOTE: Product information and specifications subject to change without notice. Refer to the MGM Brakes website for latest updated information.

Standard Stroke Model

Replacement Parts						
	P/N Series	3538051	3528051	3531051	3532051	3536051
	Model	TR2424LTS	TR2430LTS	TR3030TS	TR3036TS	TR3636TS
1	Kit - NP Chamber (a)	9015152	9015152	9015149	9015149	9015150
2	Kit - Nuts & Bolts	9003001	9003001	9003001	9003001	9003001
3	Clamp Band Assembly	8216025	8216025	8216045	8216045	8216036
4	Diaphragm	8017141	8017141	8017730	8017730	8017836
5	Kit - Push-Rod Assembly (a) SAE	9064002	9064002	9064003	9064003	9064004
5a	Kit - Push-Rod Assembly (a) METRIC	9064016	9064016	9064035	9064035	9064009
6	Return Spring	8068012	8068012	8068012	8068012	8068012
7	Kit - Center Hole Shield	9065002	9065002	9065002	9065002	9065002
8	NP Chamber Assembly (a)	9015151	9015151	9015122	9015122	9015108
9	Kit - Nuts & Washers SAE	9002001	9002001	9002001	9002001	9002001
9a	Kit - Nuts & Washers METRIC	9002002	9002002	9002002	9002002	9002002
10	Hex Nut - Yoke SAE	8130004	8130004	8130004	8130004	8130004
10a	Hex Nut - Yoke METRIC	8130016	8130016	8130016	8130016	8130016
11	Kit - Weatherseal™ Plug	9019005	9019005	9019005	9019006	9019006
12	Kit - Release Bolt	9007003	9007003	9007003	9007009	9007009
13	Kit - Breather Tube	9081001	9081001	9081001	9081001	9081001
OPTIONAL ITEMS - For additional replacement parts, refer to Section 9						
	Yoke Assembly	For additional replacement parts, refer to Section 9				
	Boot & Retainer	For additional replacement parts, refer to Section 9				

NOTE: (a) To ensure correct stroke alert positioning, these kits must be used only on the designated MGM Brake units.

Welded Yoke Chamber

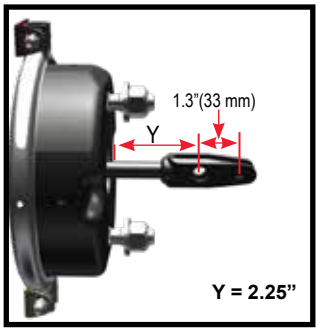

For more welded yoke choices, see page 104-105

Epoxy Coated Components

The center case and upper piston are epoxy coated for extra added protection, which, along with our patented "corrosion fighter" technology, make MGM "Severe Service" Chambers the best choice for severe operating environments: such as acids, salt, liquid corrosives and concrete.

Includes composite guide with Corrosion Fighter Technology:

NOTE: Product information and specifications subject to change without notice. Refer to the MGM Brakes website for latest updated information.

Standard Stroke Model

Combination	Piggyback Plus Kit
VMRS# 013-004-000 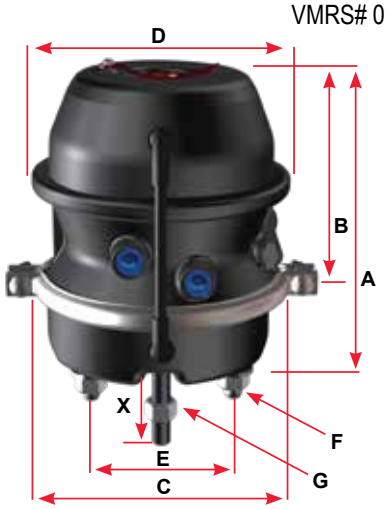	N/A

TR-TSHD Model Features

✓	Tamper Resistant Parking Chamber Design	✓	Center Hole Diaphragms w/Type 30 Spring Side Models
✓	Epoxy Coated Steel Parking Spring Head w/Weatherseal Plug	✓	Corrosion Fighter Composite Spring Guide w/Type 30 & 36 Spring Side Models
✓	A360 Aluminum Center Case w/Release Bolt Storage Pocket	✓	Heavy Duty "Long Life" Power Spring w/Additional Parking Force
✓	Low Friction Internal Push-Rod Polymer Guide w/Nitrile Rubber Air Seal		Reinforced Non-Pressure Chamber Housing w/Welded Mounting Bolts
✓	Epoxy Coated Return & Power Springs	✓	External Breather Tube
✓	Epoxy Coated Heavy-Duty Steel Non-Pressure Chamber Housing		3 inch (76.2 mm) Long Stroke Increases Safety
✓	Epoxy Coated External Piston Rod w/Stroke Alert and Stone Shield	✓	Epoxy Coated Center Case (Inside & Out)
✓	Heavy Duty Reinforced Diaphragms (Oil Resistant Options Available)		

P/N Series	3526	3533
Model	TR2430LTSHD	TR3030TSHD
Size	2430	3030
Stroke	2.50" (63.5 mm)	2.50" (63.5 mm)
P/N Combination SAE	3526051	3533051
P/N Combination 12" Rod*	N/A	3533551*
P/N Combination 18" Rod*	N/A	3533651*
P/N Neoprene Diaphragm	N/A	3533851
P/N Welded Yoke (2.25")	N/A	N/A
P/N Piggyback Plus Kit SAE	N/A	N/A
P/N Combination METRIC	3526049	3533049
Wt.Combination	18.6 lb (8.4 kg)	19.9 lb (9.0 kg)
Wt. Single	N/A	N/A
A	8.99" (228.4 mm)	9.04" (229.6 mm)
B	6.87" (174.5 mm)	6.71" (170.4 mm)
C	7.19" (182.7 mm)	8.32" (211.3 mm)
D	8.21" (208.5 mm)	8.21" (208.5 mm)
E	4.75" (120.7 mm)	
F	5/8" - 11 UNC (M16 x 1.5 - 6g)	
G	5/8" - 18 UNF (M16 x 1.5 - 6g)	
Inlets	3/8" - 18 NPTF (M16 x 1.5 - 6H)	
X - Min. (in the caged position)	8.00" (203.2 mm)	

* For Transit, Hendrickson Intraax/Vantraax Suspension applications. P/N's ending in XXXX651 have 3/4" push-rod.

NOTE: Product information and specifications subject to change without notice. Refer to the MGM Brakes website for latest updated information.

Standard Stroke Model

Replacement Parts			
	P/N Series	3526051	3533051
	Model	TR2430LTSHD	TR3030TSHD
1	Kit - NP Chamber (a)	9015152	9015149
2	Kit - Nuts & Bolts	9003001	9003001
3	Clamp Band Assembly	8216025	8216045
4	Diaphragm	8017141	8017730
5	Kit - Push-Rod Assembly (a) SAE	9064002	9064003
5a	Kit - Push-Rod Assembly (a) METRIC	9064016	9064035
6	Return Spring	8068012	8068012
7	Kit - Center Hole Shield	9065002	9065002
8	NP Chamber Assembly (a)	9015151	9015122
9	Kit - Nuts & Washers SAE	9002001	9002001
9a	Kit - Nuts & Washers METRIC	9002002	9002002
10	Hex Nut - Yoke SAE	8130004	8130004
10a	Hex Nut - Yoke METRIC	8130016	8130016
11	Kit - Weatherseal™ Plug	9019005	9019005
12	Kit - Release Bolt	9007003	9007003
13	Kit - Breather Tube	9081001	9081001
OPTIONAL ITEMS - For additional replacement parts, refer to Section 9			
	Yoke Assembly	For additional replacement parts, refer to Section 9	
	Boot & Retainer	For additional replacement parts, refer to Section 9	

NOTE: (a) To ensure correct stroke alert positioning, these kits must be used only on the designated MGM Brake units.

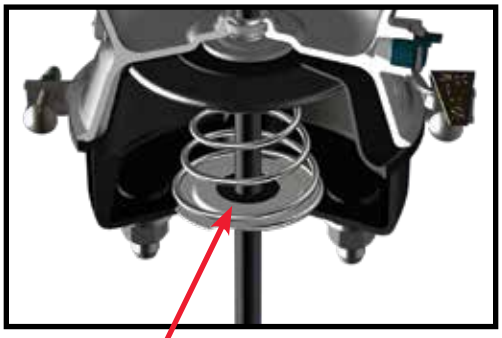

Center Hole Shield
Permits visual inspection of stroke alert but prevents entry of contaminants.

NOTE: Product information and specifications subject to change without notice. Refer to the MGM Brakes website for latest updated information.

Standard Stroke Model

Combination	Piggyback Plus Kit
VMRS# 013-004-000 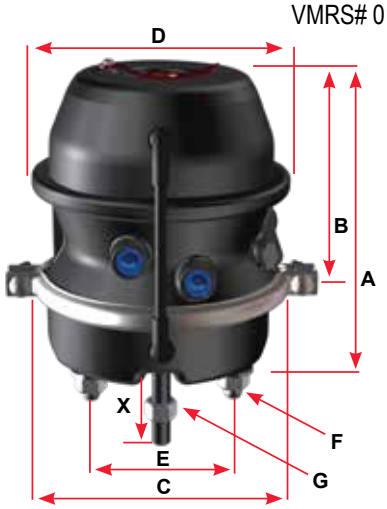	N/A

TR-TSHDW Model Features

✓	Tamper Resistant Parking Chamber Design	✓	Center Hole Diaphragms w/Type 30 Spring Side Models
✓	Epoxy Coated Steel Parking Spring Head w/Weatherseal Plug	✓	Corrosion Fighter Composite Spring Guide w/Type 30 & 36 Spring Side Models
✓	A360 Aluminum Center Case w/Release Bolt Storage Pocket	✓	Heavy Duty "Long Life" Power Spring w/Additional Parking Force
✓	Low Friction Internal Push-Rod Polymer Guide w/Nitrile Rubber Air Seal	✓	Reinforced Non-Pressure Chamber Housing w/Welded Mounting Bolts
✓	Epoxy Coated Return & Power Springs	✓	External Breather Tube
✓	Epoxy Coated Heavy-Duty Steel Non-Pressure Chamber Housing		3 inch (76.2 mm) Long Stroke Increases Safety
✓	Epoxy Coated External Piston Rod w/Stroke Alert and Stone Shield	✓	Epoxy Coated Center Case (Inside & Out)
✓	Heavy Duty Reinforced Diaphragms (Oil Resistant Options Available)		

P/N Series	3544
Model	TR3030TSHDW
Size	3030
Stroke	2.50" (63.5 mm)
P/N Combination SAE	3544051
P/N Neoprene Diaphragm	N/A
P/N Welded Yoke (2.25")	N/A
P/N Piggyback Plus Kit SAE	N/A
P/N Combination METRIC	3544049
Wt. Combination	19.9 lb (9.0 kg)
Wt. Single	N/A
A	9.04" (229.6 mm)
B	6.71" (170.4 mm)
C	8.32" (211.3 mm)
D	8.21" (208.5 mm)
E	4.75" (120.7 mm)
F	5/8" - 11 UNC (M16 x 1.5 - 6g)
G	5/8" - 18 UNF (M16 x 1.5 - 6g)
Inlets	3/8" - 18 NPTF (M16 x 1.5 - 6H)
X - Min. (in the caged position)	8.00" (203.2 mm)

NOTE: Product information and specifications subject to change without notice. Refer to the MGM Brakes website for latest updated information.

Replacement Parts		
	P/N Series	3544
	Model	TR3030TSHDW
1	Kit - NP Chamber (a)	9015149
2	Kit - Nuts & Bolts	9003001
3	Clamp Band Assembly	8216045
4	Diaphragm	8017730
5	Kit - Push-Rod Assembly (a) SAE	9064003
5a	Kit - Push-Rod Assembly (a) METRIC	9064035
6	Return Spring	8068012
7	Kit - Center Hole Shield	9065002
8	NP Chamber Assembly (a)	9015259
9	Kit - Nuts & Washers SAE	9002001
9a	Kit - Nuts & Washers METRIC	9002002
10	Hex Nut - Yoke SAE	8130004
10a	Hex Nut - Yoke METRIC	8130016
11	Kit - Weatherseal™ Plug	9019005
12	Kit - Release Bolt	9007003
13	Kit - Breather Tube	9081001
OPTIONAL ITEMS - For additional replacement parts, refer to Section 9		
	Yoke Assembly	For additional replacement parts, refer to Section 9
	Boot & Retainer	For additional replacement parts, refer to Section 9

NOTE: (a) To ensure correct stroke alert positioning, these kits must be used only on the designated MGM Brake units.

Weld Reinforced Non-Pressure Housing

Heavy-gauge formed steel flat-bottom design, epoxy coated for total corrosion protection and "weld-reinforced" mounting studs for added support in extreme vibration applications. (bolt actually epoxy coated - depicted here lighter for visual purposes)

NOTE: Product information and specifications subject to change without notice. Refer to the MGM Brakes website for latest updated information.

Long Stroke Model

Combination

VMRS# 013-004-000

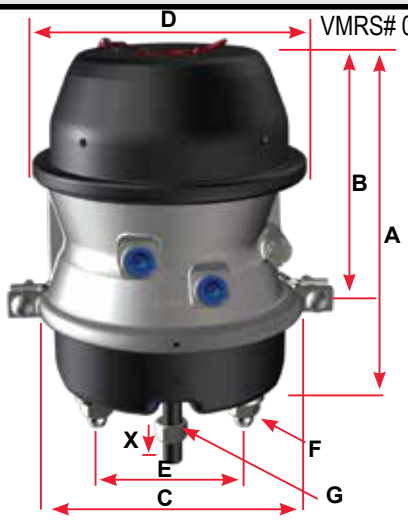

Piggyback Plus Kit

VMRS# 013-004-001

TR-LP3/TR-L3 Model Features

✓	Tamper Resistant Parking Chamber Design	✓	Center Hole Diaphragms w/Type 30 Spring Side Models
✓	Epoxy Coated Steel Parking Spring Head w/Weatherseal Plug	✓	Corrosion Fighter Composite Spring Guide w/Type 30 & 36 Spring Side Models
✓	A360 Aluminum Center Case w/Release Bolt Storage Pocket		Heavy Duty "Long Life" Power Spring w/Additional Parking Force
✓	Low Friction Internal Push-Rod Polymer Guide w/Nitrile Rubber Air Seal		Reinforced Non-Pressure Chamber Housing w/Welded Mounting Bolts
✓	Epoxy Coated Return & Power Springs		External Breather Tube
✓	Epoxy Coated Heavy-Duty Steel Non-Pressure Chamber Housing	✓	3 inch (76.2 mm) Long Stroke Increases Safety
✓	Epoxy Coated External Piston Rod w/Stroke Alert and Stone Shield		Epoxy Coated Center Case (Inside & Out)
✓	Heavy Duty Reinforced Diaphragms (Oil Resistant Options Available)		

P/N Series	3220	3224	3230	3234
Model	TR2030LP3H	TR2430LP3	TR3030LP3	TR3036L3
Size	2030	2430	3030	3036
Stroke	3.00" (76.2 mm)	3.00" (76.2 mm)	3.00" (76.2 mm)	3.00" (76.2 mm)
P/N Combination SAE	3220051	3224051	3230051	3234051
P/N Combination 12" Rod*	N/A	3224551*	3230551*	N/A
P/N Combination 18" Rod*	N/A	3224651*	3230651*	N/A
P/N Neoprene Diaphragm	N/A	3224851	3230851	N/A
P/N Welded Yoke (2.25")	3220951	3224951	3230951	3234951
P/N Piggyback Plus Kit SAE	3220008	3224008	3230008	3234008
P/N Combination METRIC	3220049	3224049	3230049	3234049
Wt. Combination	19.1 lb (8.7 kg)	19.3 lb (8.8 kg)	20.1 lb (9.1 kg)	26.9 lb (12.2 kg)
Wt. Single	11.5 lb (5.2 kg)	11.5 lb (5.2 kg)	11.5 lb (5.2 kg)	18.3 lb (8.3 kg)
A	10.19" (258.8 mm)	10.19" (258.8 mm)	9.99" (253.7 mm)	10.96" (278.4 mm)
B	7.81" (198.4 mm)	7.81" (198.4 mm)	7.61" (193.3 mm)	8.62" (218.9 mm)
C	7.38" (187.5 mm)	7.38" (187.5 mm)	8.32" (211.3 mm)	8.14" (206.8 mm)
D	8.21" (208.5 mm)	8.21" (208.5 mm)	8.21" (208.5 mm)	9.18" (233.2 mm)
E	4.75" (120.7 mm)			
F	5/8" - 11 UNC (M16 x 1.5 - 6g)			
G	5/8" - 18 UNF (M16 x 1.5 - 6g)			
Inlets	3/8" - 18 NPTF (M16 x 1.5 - 6H)			
X - Min. (in the caged position)	8.00" (203.2 mm)			

* For Transit, Hendrickson Intraax/Vantraax Suspension applications. P/N's ending in XXXX651 have 3/4" push-rod.

NOTE: Product information and specifications subject to change without notice. Refer to the MGM Brakes website for latest updated information.

Replacement Parts					
	P/N Series	3220	3224	3230	3234
	Model	TR2030LP3H	TR2430LP3	TR3030LP3	TR3036LP3
1	Kit - NP Chamber (a)	9015231	9015210	9015212	9015906
2	Kit - Nuts & Bolts	9003001	9003001	9003001	9003001
3	Clamp Band Assembly	8216027	8216025	8216045	8216045
4	Diaphragm	8017226	8017424	8017830	8017830
5	Kit - Push-Rod Assembly (a) SAE	9064026	9064006	9064008	9064008
5a	Kit - Push-Rod Assembly (a) METRIC	9064036	9064027	9064028	9064028
6	Return Spring	8068012	8068012	8068012	8068017
7	Kit - Center Hole Shield	9065002	9065002	9065002	9065002
8	NP Chamber Assembly (a)	8215200	8215200	8215501	9015935
9	Kit - Nuts & Washers SAE	9002001	9002001	9002001	9002001
9a	Kit - Nuts & Washers METRIC	9002002	9002002	9002002	9002002
10	Hex Nut - Yoke SAE	8130004	8130004	8130004	8130004
10a	Hex Nut - Yoke METRIC	8130016	8130016	8130016	8130016
11	Kit - Weatherseal™ Plug	9019005	9019005	9019005	9019006
12	Kit - Release Bolt	9007003	9007003	9007003	9007009
13	Kit - Piggyback Plus SAE	3220008	3224008	3230008	3234008
OPTIONAL ITEMS - For additional replacement parts, refer to Section 9					
	Yoke & Welded Yoke Assemblies	For additional replacement parts, refer to Section 9			
	Boot & Retainer	For additional replacement parts, refer to Section 9			

NOTE: (a) To ensure correct stroke alert positioning, these kits must be used only on the designated MGM Brake units.

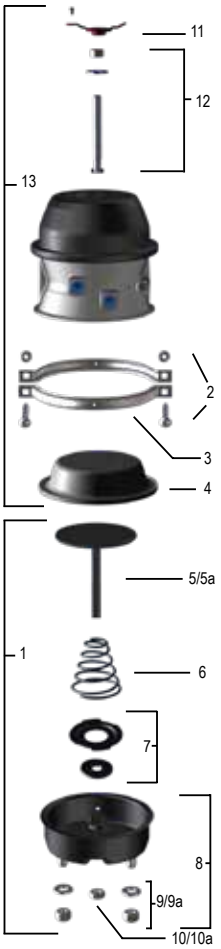

CORROSION FIGHTER® TECHNOLOGY

Composite Guide - A Standard Feature
Constructed from heavy-duty, non-metallic composite material. Available on all TR - Long Stroke model chambers.

Note: *guide is depicted in orange for visual purposes.*

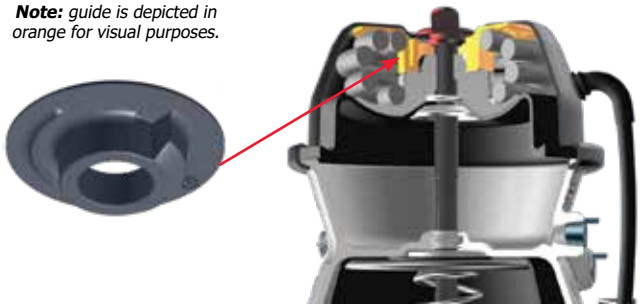

NOTE: Product information and specifications subject to change without notice. Refer to the MGM Brakes website for latest updated information.

Long Stroke Model

Combination

VMRS# 013-004-000

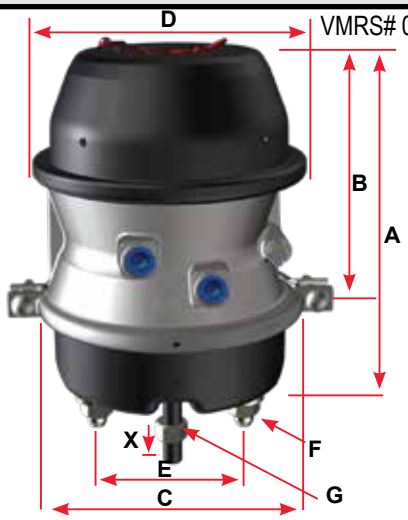

Piggyback Plus Kit

VMRS# 013-004-001

TR-LP3HD Model Features

✓	Tamper Resistant Parking Chamber Design	✓	Center Hole Diaphragms w/Type 30 Spring Side Models
✓	Epoxy Coated Steel Parking Spring Head w/Weatherseal Plug	✓	Corrosion Fighter Composite Spring Guide w/Type 30 & 36 Spring Side Models
✓	A360 Aluminum Center Case w/Release Bolt Storage Pocket	✓	Heavy Duty "Long Life" Power Spring w/Additional Parking Force
✓	Low Friction Internal Push-Rod Polymer Guide w/Nitrile Rubber Air Seal		Reinforced Non-Pressure Chamber Housing w/Welded Mounting Bolts
✓	Epoxy Coated Return & Power Springs		External Breather Tube
✓	Epoxy Coated Heavy-Duty Steel Non-Pressure Chamber Housing	✓	3 inch (76.2 mm) Long Stroke Increases Safety
✓	Epoxy Coated External Piston Rod w/Stroke Alert and Stone Shield		Epoxy Coated Center Case (Inside & Out)
✓	Heavy Duty Reinforced Diaphragms (Oil Resistant Options Available)		

P/N Series	3226	3232
Model	TR2430LP3HD	TR3030LP3HD
Size	2430	3030
Stroke	3.00" (76.2 mm)	3.00" (76.2 mm)
P/N Combination SAE	3226051	3232051
P/N Combination 12" Rod*	3226551*	3232551*
P/N Combination 18" Rod*	3226651*	3232651*
P/N Neoprene Diaphragm	N/A	3232851
P/N Welded Yoke (2.25")	3226951	3232951
P/N Piggyback Plus Kit SAE	3226008	3232008
P/N Combination METRIC	3226049	3232049
Wt. Combination	19.5 lb (8.8 kg)	20.4 lb (9.3 kg)
Wt. Single	11.7 lb (5.3 kg)	11.7 lb (5.3 kg)
A	10.19" (258.8mm)	9.99" (253.7 mm)
B	7.81" (198.4 mm)	7.61" (193.3 mm)
C	7.38" (187.5 mm)	8.32" (211.3 mm)
D	8.21" (208.5 mm)	8.21" (208.5 mm)
E	4.75" (120.7 mm)	
F	5/8" - 11 UNC (M16 x 1.5 - 6g)	
G	5/8" - 18 UNF (M16 x 1.5 - 6g)	
Inlets	3/8" - 18 NPTF (M16 x 1.5 - 6H)	
X - Min. (in the caged position)	8.00" (203.2 mm)	

* For Transit, Hendrickson Intraax/Vantraax Suspension applications. P/N's ending in XXXX651 have 3/4" push-rod.

Welded Yoke Chamber

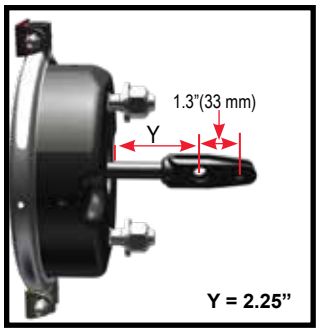

For more welded yoke choices, see page 104-105

NOTE: Product information and specifications subject to change without notice. Refer to the MGM Brakes website for latest updated information.

Replacement Parts			
	P/N Series	3226	3232
	Model	TR2430LP3HD	TR3030LP3HD
1	Kit - NP Chamber (a)	9015210	9015212
2	Kit - Nuts & Bolts	9003001	9003001
3	Clamp Band Assembly	8216025	8216045
4	Diaphragm	8017424	8017830
5	Kit - Push-Rod Assembly (a) SAE	9064006	9064008
5a	Kit - Push-Rod Assembly (a) METRIC	9064027	9064028
6	Return Spring	8068012	8068012
7	Kit - Center Hole Shield	9065002	9065002
8	NP Chamber Assembly (a)	8215200	8215501
9	Kit - Nuts & Washers SAE	9002001	9002001
9a	Kit - Nuts & Washers METRIC	9002002	9002002
10	Hex Nut - Yoke SAE	8130004	8130004
10a	Hex Nut - Yoke METRIC	8130016	8130016
11	Kit - Weatherseal™ Plug	9019005	9019005
12	Kit - Release Bolt	9007003	9007003
13	Kit - Piggyback Plus SAE	3226008	3232008
OPTIONAL ITEMS - For additional replacement parts, refer to Section 9			
	Yoke & Welded Yoke Assemblies	For additional replacement parts, refer to Section 9	
	Boot & Retainer	For additional replacement parts, refer to Section 9	

NOTE: (a) To ensure correct stroke alert positioning, these kits must be used only on the designated MGM Brake units.

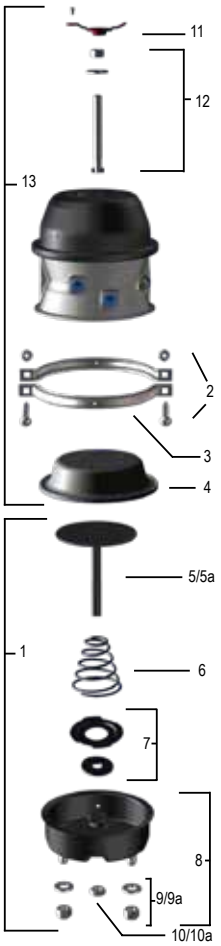

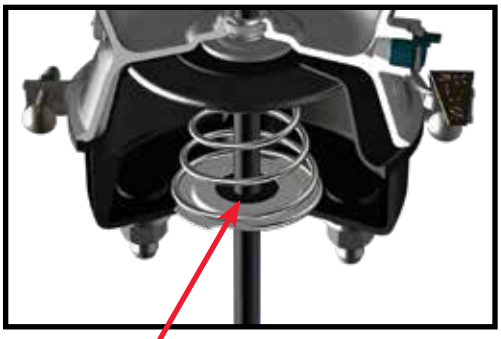

Center Hole Shield
Allows for visual inspection of stroke alert while preventing entry of contaminants.

NOTE: Product information and specifications subject to change without notice. Refer to the MGM Brakes website for latest updated information.

Long Stroke Model

Combination

VMRS# 013-004-000

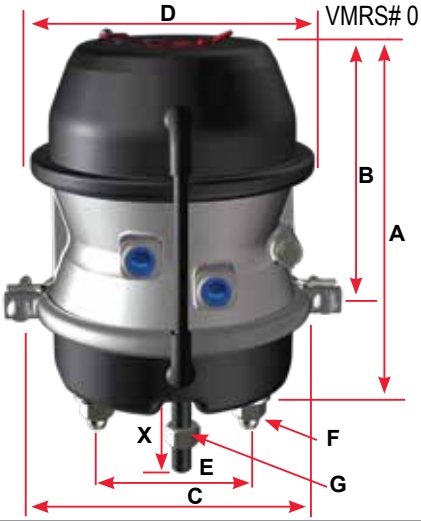

Piggyback Plus Kit

VMRS# 013-004-001

TR-LP3T/L3T Model Features

✓	Tamper Resistant Parking Chamber Design	✓	Center Hole Diaphragms w/Type 30 Spring Side Models
✓	Epoxy Coated Steel Parking Spring Head w/Weatherseal Plug	✓	Corrosion Fighter Composite Spring Guide w/Type 30 & 36 Spring Side Models
✓	A360 Aluminum Center Case w/Release Bolt Storage Pocket		Heavy Duty "Long Life" Power Spring w/Additional Parking Force
✓	Low Friction Internal Push-Rod Polymer Guide w/Nitrile Rubber Air Seal		Reinforced Non-Pressure Chamber Housing w/Welded Mounting Bolts
✓	Epoxy Coated Return & Power Springs	✓	External Breather Tube
✓	Epoxy Coated Heavy-Duty Steel Non-Pressure Chamber Housing	✓	3 inch (76.2 mm) Long Stroke Increases Safety
✓	Epoxy Coated External Piston Rod w/Stroke Alert and Stone Shield		Epoxy Coated Center Case (Inside & Out)
✓	Heavy Duty Reinforced Diaphragms (Oil Resistant Options Available)		

P/N Series	3221	3225	3231	3235
Model	TR2030LP3TH	TR2430LP3T	TR3030LP3T	TR3036L3T
Size	2030	2430	3030	3036
Stroke	3.00" (76.2 mm)	3.00" (76.2 mm)	3.00" (76.2 mm)	3.00" (76.2 mm
P/N Combination SAE	3221051	3225051	3231051	3235051
P/N Combination 12" Rod*	N/A	3225551*	3231551*	N/A
P/N Combination 18" Rod*	N/A	N/A	3231651*	N/A
P/N Neoprene Diaphragm	N/A	3225851	3231851	N/A
P/N Welded Yoke (2.25")	N/A	3225951	3231951	3235951
P/N Piggyback Plus Kit SAE	3221008	3225008	3231008	3235008
P/N Combination METRIC	3221049	3225049	3231049	3235049
Wt. Combination	19.1 lb (8.7 kg)	19.3 lb (8.8 kg)	20.1 lb (9.1 kg)	26.9 lb (12.2 kg)
Wt. Single	11.5 lb (5.2 kg)	11.5 lb (5.2 kg)	11.5 lb (5.2 kg)	18.3 lb (8.3 kg)
A	10.19" (258.8 mm)	10.19" (258.8 mm)	9.99" (253.7 mm)	10.96" (278.4 mm)
B	7.81" (198.4 mm)	7.81" (198.4 mm)	7.61" (193.3 mm)	8.62" (218.9 mm)
C	7.38" (187.5 mm)	7.38" (187.5 mm)	8.32" (211.3 mm)	8.14" (206.8 mm)
D	8.21" (208.5 mm)	8.21" (208.5 mm)	8.21" (208.5 mm)	9.18" (233.2 mm)
E	4.75" (120.7 mm)			
F	5/8" - 11 UNC (M16 x 1.5 - 6g)			
G	5/8" - 18 UNF (M16 x 1.5 - 6g)			
Inlets	3/8" - 18 NPTF (M16 x 1.5 - 6H)			
X - Min. (in the caged position)	8.00" (203.2 mm)			

* For Transit, Hendrickson Intraax/Vantraax Suspension applications. P/N's ending in XXXX651 have 3/4" push-rod.

NOTE: Product information and specifications subject to change without notice. Refer to the MGM Brakes website for latest updated information.

Replacement Parts					
	P/N Series	3221	3225	3231	3235
	Model	TR2030LP3TH	TR2430LP3T	TR3030LP3T	TR3036LP3T
1	Kit - NP Chamber (a)	9015232	9015215	9015218	9015905
2	Kit - Nuts & Bolts	9003001	9003001	9003001	9003001
3	Clamp Band Assembly	8216027	8216025	8216045	8216045
4	Diaphragm	8017226	8017424	8017830	8017830
5	Kit - Push-Rod Assembly (a) SAE	9064026	9064006	9064008	9064008
5a	Kit - Push-Rod Assembly (a) METRIC	9064036	9064027	9064028	9064028
6	Return Spring	8068012	8068012	8068012	8068017
7	Kit - Center Hole Shield	9065002	9065002	9065002	9065002
8	NP Chamber Assembly (a)	9015213	9015213	9015122	9015936
9	Kit - Nuts & Washers SAE	9002001	9002001	9002001	9002001
9a	Kit - Nuts & Washers METRIC	9002002	9002002	9002002	9002002
10	Hex Nut - Yoke SAE	8130004	8130004	8130004	8130004
10a	Hex Nut - Yoke METRIC	8130016	8130016	8130016	8130016
11	Kit - Weatherseal™ Plug	9019005	9019005	9019005	9019006
12	Kit - Release Bolt	9007003	9007003	9007003	9007009
13	Kit - Breather Tube	9081001	9081001	9081001	9081001
14	Kit - Piggyback Plus SAE	3221008	3225008	3231008	3235008
OPTIONAL ITEMS - For additional replacement parts, refer to Section 9					
	Yoke & Welded Yoke Assemblies	For additional replacement parts, refer to Section 9			
	Boot & Retainer	For additional replacement parts, refer to Section 9			

NOTE: (a) To ensure correct stroke alert positioning, these kits must be used only on the designated MGM Brake units.

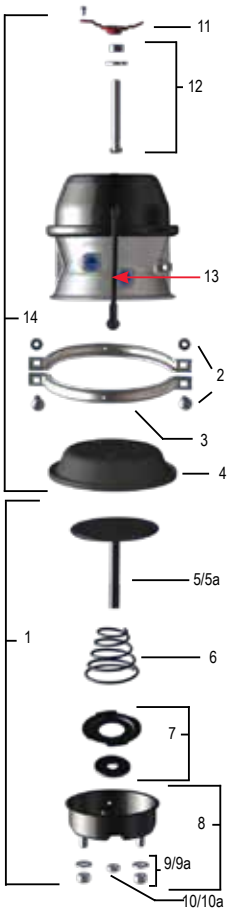

External Breather-Tube

Vents air from inside the protected area of the non-pressure chamber to effectively prevent entry of liquid and solid corrosive contaminants that can cause premature failure of the spring brake chamber.

NOTE: Product information and specifications subject to change without notice. Refer to the MGM Brakes website for latest updated information.

Long Stroke Model

Combination

VMRS# 013-004-000

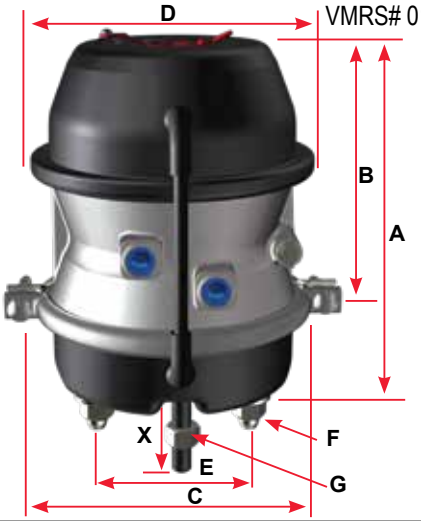

Piggyback Plus Kit

VMRS# 013-004-001

TR-LP3THD Model Features

✓	Tamper Resistant Parking Chamber Design	✓	Center Hole Diaphragms w/Type 30 Spring Side Models
✓	Epoxy Coated Steel Parking Spring Head w/Weatherseal Plug	✓	Corrosion Fighter Composite Spring Guide w/Type 30 & 36 Spring Side Models
✓	A360 Aluminum Center Case w/Release Bolt Storage Pocket	✓	Heavy Duty "Long Life" Power Spring w/Additional Parking Force
✓	Low Friction Internal Push-Rod Polymer Guide w/Nitrile Rubber Air Seal		Reinforced Non-Pressure Chamber Housing w/Welded Mounting Bolts
✓	Epoxy Coated Return & Power Springs	✓	External Breather Tube
✓	Epoxy Coated Heavy-Duty Steel Non-Pressure Chamber Housing	✓	3 inch (76.2 mm) Long Stroke Increases Safety
✓	Epoxy Coated External Piston Rod w/Stroke Alert and Stone Shield		Epoxy Coated Center Case (Inside & Out)
✓	Heavy Duty Reinforced Diaphragms (Oil Resistant Options Available)		

P/N Series	3227	3233
Model	TR2430LP3THD	TR3030LP3THD
Size	2430	3030
Stroke	3.00" (76.2 mm)	3.00" (76.2 mm)
P/N Combination SAE	3227051	3233051
P/N Combination 12" Rod*	N/A	3233551*
P/N Combination 18" Rod*	N/A	3233651*
P/N Neoprene Diaphragm	3227851	N/A
P/N Welded Yoke (2.25")	3227951	3233951
P/N Piggyback Plus Kit SAE	3227008	3233008
P/N Combination METRIC	3227049	3233049
Wt. Combination	19.5 lb (8.8 kg)	20.4 lb (9.3 kg)
Wt. Single	11.7 lb (5.3 kg)	11.7 lb (5.3 kg)
A	10.19" (258.8 mm)	9.99" (253.7 mm)
B	7.81" (198.4 mm)	7.61" (193.3 mm)
C	7.38" (187.5 mm)	8.32" (211.3 mm)
D	8.21" (208.5 mm)	8.21" (208.5 mm)
E	4.75" (120.7 mm)	
F	5/8" - 11 UNC (M16 x 1.5 - 6g)	
G	5/8" - 18 UNF (M16 x 1.5 - 6g)	
Inlets	3/8" - 18 NPTF (M16 x 1.5 - 6H)	
X - Min. (in the caged position)	8.00" (203.2 mm)	

Welded Yoke Chamber

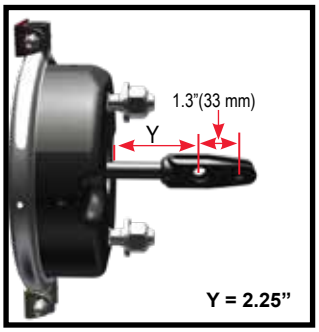

For more welded yoke choices, see page 104-105

* For Transit, Hendrickson Intraax/Vantraax Suspension applications. P/N's ending in XXXX651 have 3/4" push-rod.

NOTE: Product information and specifications subject to change without notice. Refer to the MGM Brakes website for latest updated information.

Replacement Parts			
	P/N Series	3227	3233
	Model	TR2430LP3THD	TR3030LP3THD
1	Kit - NP Chamber (a)	9015215	9015218
2	Kit - Bolts & Nuts	9003001	9003001
3	Clamp Band Assembly	8216025	8216045
4	Diaphragm	8017424	8017830
5	Kit - Push-Rod Assembly (a) SAE	9064006	9064008
5a	Kit - Push-Rod Assembly (a) METRIC	9064027	9064028
6	Return Spring	8068012	8068012
7	Kit - Center Hole Shield	9065002	9065002
8	NP Chamber Assembly (a)	9015213	9015122
9	Kit - Nuts & Washers SAE	9002001	9002001
9a	Kit - Nuts & Washers METRIC	9002002	9002002
10	Hex Nut - Yoke SAE	8130004	8130004
10a	Hex Nut - Yoke METRIC	8130016	8130016
11	Kit - Weatherseal™ Plug	9019005	9019005
12	Kit - Release Bolt	9007003	9007003
13	Kit - Breather Tube	9081001	9081001
14	Kit - Piggyback Plus	3227008	3233008
OPTIONAL ITEMS - For additional replacement parts, refer to Section 9			
	Yoke & Welded Yoke Assemblies	For additional replacement parts, refer to Section 9	
	Boot & Retainer	For additional replacement parts, refer to Section 9	

NOTE: (a) To ensure correct stroke alert positioning, these kits must be used only on the designated MGM Brake units.

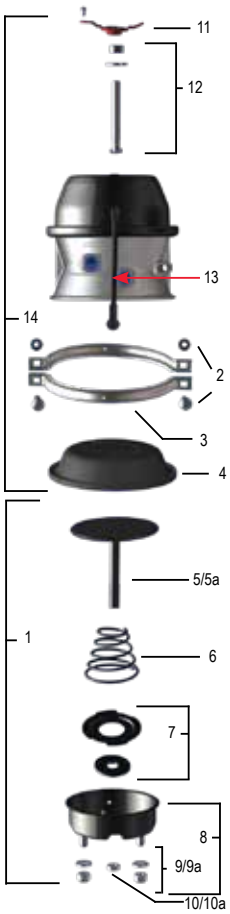

Center Seal (Push-Rod Air Seal)
Multi-lipped, pressure activated seal – an MGM exclusive - molded from specially formulated low-temperature-resistant Nitrile Rubber, providing long-term protection against air leaks. Nylon guides eliminate metal to metal contact and premature failure in this critical area.

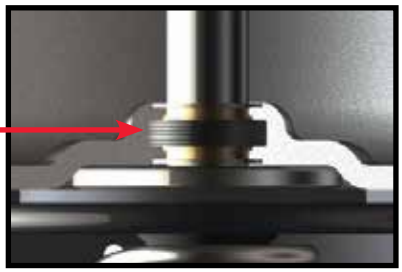

NOTE: Product information and specifications subject to change without notice. Refer to the MGM Brakes website for latest updated information.

Long Stroke Model

Combination	Piggyback Plus Kit
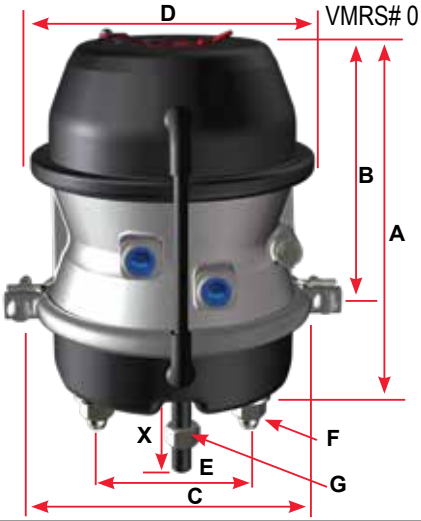	N/A

TR-LP3THDW Model Features

✓	Tamper Resistant Parking Chamber Design	✓	Center Hole Diaphragms w/Type 30 Spring Side Models
✓	Epoxy Coated Steel Parking Spring Head w/Weatherseal Plug	✓	Corrosion Fighter Composite Spring Guide w/Type 30 & 36 Spring Side Models
✓	A360 Aluminum Center Case w/Release Bolt Storage Pocket	✓	Heavy Duty "Long Life" Power Spring w/Additional Parking Force
✓	Low Friction Internal Push-Rod Polymer Guide w/Nitrile Rubber Air Seal	✓	Reinforced Non-Pressure Chamber Housing w/Welded Mounting Bolts
✓	Epoxy Coated Return & Power Springs	✓	External Breather Tube
✓	Epoxy Coated Heavy-Duty Steel Non-Pressure Chamber Housing	✓	3 inch (76.2 mm) Long Stroke Increases Safety
✓	Epoxy Coated External Piston Rod w/Stroke Alert and Stone Shield		Epoxy Coated Center Case (Inside & Out)
✓	Heavy Duty Reinforced Diaphragms (Oil Resistant Options Available)		

P/N Series	3244
Model	TR3030LP3THDW
Size	3030
Stroke	3.00" (76.2 mm)
P/N Combination SAE	3244051
P/N Combination 12" Rod*	3244551*
P/N Combination 18" Rod*	N/A
P/N Neoprene Diaphragm	N/A
P/N Welded Yoke (2.25")	3244951
P/N Piggyback Plus Kit SAE	N/A
P/N Combination METRIC	3244049
Wt. Combination	20.4 lb (9.3 kg)
Wt. Single	N/A
A	9.99" (253.7 mm)
B	7.61" (193.3 mm)
C	8.32" (211.3 mm)
D	8.21" (208.5 mm)
E	4.75" (120.7 mm)
F	5/8" - 11 UNC (M16 x 1.5 - 6g)
G	5/8" - 18 UNF (M16 x 1.5 - 6g)
Inlets	3/8" - 18 NPTF (M16 x 1.5 - 6H)
X - Min. (in the caged position)	8.00" (203.2 mm)

Welded Yoke Chamber

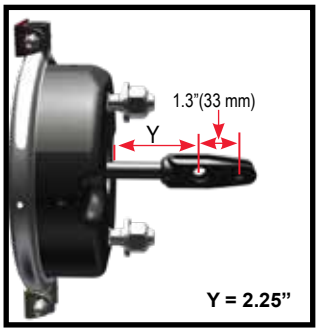

For more welded yoke choices, see page 104-105

* For Transit, Hendrickson Intraax/Vantraax Suspension applications. P/N's ending in XXXX651 have 3/4" push-rod.

NOTE: Product information and specifications subject to change without notice. Refer to the MGM Brakes website for latest updated information.

Replacement Parts		
	P/N Series	3244
	Model	TR3030LP3THDW
1	Kit - NP Chamber (a)	9015936
2	Kit - Bolts & Nuts	9003001
3	Clamp Band Assembly	8216045
4	Diaphragm	8017830
5	Kit - Push-Rod Assembly (a) SAE	9064008
5a	Kit - Push-Rod Assembly (a) METRIC	9064028
6	Return Spring	8068012
7	Kit - Center Hole Shield	9065002
8	NP Chamber Assembly (a)	9015259
9	Kit - Nuts & Washers SAE	9002001
9a	Kit - Nuts & Washers METRIC	9002002
10	Hex Nut - Yoke SAE	8130004
10a	Hex Nut - Yoke METRIC	8130016
11	Kit - Weatherseal™ Plug	9019005
12	Kit - Release Bolt	9007003
13	Kit - Breather Tube	9081001
OPTIONAL ITEMS - For additional replacement parts, refer to Section 9		
Yoke & Welded Yoke Assemblies		For additional replacement parts, refer to Section 9
Boot & Retainer		For additional replacement parts, refer to Section 9

NOTE: (a) To ensure correct stroke alert positioning, these kits must be used only on the designated MGM Brake units.

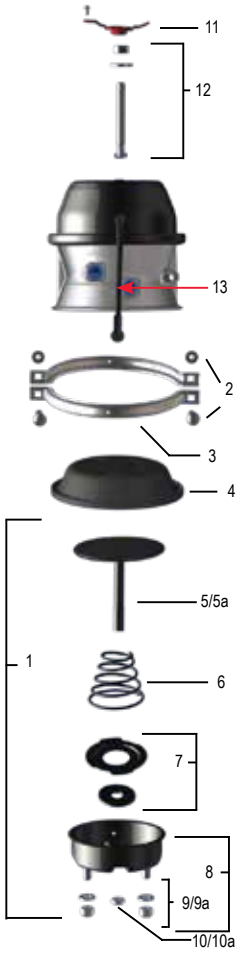

Weld Reinforced Non-Pressure Housing

Heavy-gauge formed steel flat-bottom design, epoxy coated for total corrosion protection and "weld-reinforced" mounting studs for added support in extreme vibration applications. (bolt actually epoxy coated - depicted here lighter for visual purposes)

NOTE: Product information and specifications subject to change without notice. Refer to the MGM Brakes website for latest updated information.

Long Stroke Model

Combination	Piggyback Plus Kit
VMRS# 013-004-000 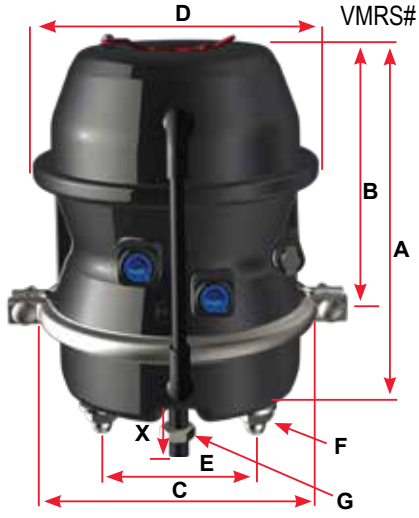	N/A

TR-LP3TS Model Features

✓	Tamper Resistant Parking Chamber Design	✓	Center Hole Diaphragms w/Type 30 Spring Side Models
✓	Epoxy Coated Steel Parking Spring Head w/Weatherseal Plug	✓	Corrosion Fighter Composite Spring Guide w/Type 30 & 36 Spring Side Models
✓	A360 Aluminum Center Case w/Release Bolt Storage Pocket		Heavy Duty "Long Life" Power Spring w/Additional Parking Force
✓	Low Friction Internal Push-Rod Polymer Guide w/Nitrile Rubber Air Seal		Reinforced Non-Pressure Chamber Housing w/Welded Mounting Bolts
✓	Epoxy Coated Return & Power Springs	✓	External Breather Tube
✓	Epoxy Coated Heavy-Duty Steel Non-Pressure Chamber Housing	✓	3 inch (76.2 mm) Long Stroke Increases Safety
✓	Epoxy Coated External Piston Rod w/Stroke Alert and Stone Shield	✓	Epoxy Coated Center Case (Inside & Out)
✓	Heavy Duty Reinforced Diaphragms (Oil Resistant Options Available)		

P/N Series	3523	3535
Model	TR2430LP3TS	TR3030LP3TS
Size	2430	3030
Stroke	3.00" (76.2 mm)	3.00" (76.2 mm)
P/N Combination SAE	3523051	3535051
P/N Combination 12" Rod*	N/A	3535551*
P/N Combination 18" Rod*	N/A	3535651*
P/N Neoprene Diaphragm	N/A	3535851
P/N Welded Yoke (2.25")	3523951	3535951
P/N Piggyback Plus Kit SAE	N/A	N/A
P/N Combination METRIC	3523049	3535049
Wt. Combination	19.3 lb (8.8 kg)	20.1 lb (9.1 kg)
Wt. Single	N/A	N/A
A	10.19" (258.8mm)	9.99" (253.7 mm)
B	7.81" (198.4 mm)	7.61" (193.3 mm)
C	7.38" (187.5 mm)	8.32" (211.3 mm)
D	8.21" (208.5 mm)	8.21" (208.5 mm)
E	4.75" (120.7 mm)	
F	5/8" - 11 UNC (M16 x 1.5 - 6g)	
G	5/8" - 18 UNF (M16 x 1.5 - 6g)	
Inlets	3/8" - 18 NPTF (M16 x 1.5 - 6H)	
X - Min. (in the caged position)	8.00" (203.2 mm)	

* For Transit, Hendrickson Intraax/Vantraax Suspension applications. P/N's ending in XXXX651 have 3/4" push-rod.

Welded Yoke Chamber

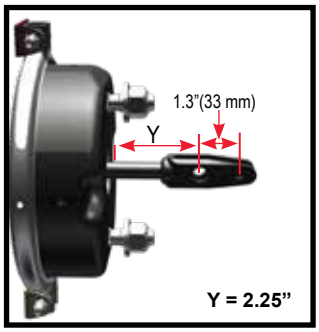

For more welded yoke choices, see page 104-105

NOTE: Product information and specifications subject to change without notice. Refer to the MGM Brakes website for latest updated information.

Replacement Parts			
	P/N Series	3523	3535
	Model	TR2430LP3TS	TR3030LP3TS
1	Kit - NP Chamber (a)	9015215	9015218
2	Kit - Nuts & Bolts	9003001	9003001
3	Clamp Band Assembly	8216025	8216045
4	Diaphragm	8017424	8017830
5	Kit - Push-Rod Assembly (a) SAE	9064006	9064008
5a	Kit - Push-Rod Assembly (a) METRIC	9064027	9064028
6	Return Spring	8068012	8068012
7	Kit - Center Hole Shield	9065002	9065002
8	NP Chamber Assembly (a)	9015213	9015122
9	Kit - Nuts & Washers SAE	9002001	9002001
9a	Kit - Nuts & Washers METRIC	9002002	9002002
10	Hex Nut - Yoke SAE	8130004	8130004
10a	Hex Nut - Yoke METRIC	8130016	8130016
11	Kit - Weatherseal™ Plug	9019005	9019005
12	Kit - Release Bolt	9007003	9007003
13	Kit - Breather Tube	9081001	9081001
OPTIONAL ITEMS - For additional replacement parts, refer to Section 9			
	Yoke & Welded Yoke Assemblies	For additional replacement parts, refer to Section 9	
	Boot & Retainer	For additional replacement parts, refer to Section 9	

NOTE: (a) To ensure correct stroke alert positioning, these kits must be used only on the designated MGM Brake units.

Epoxy Coated Components

The center case and upper piston are epoxy coated for extra added protection, which, along with our patented "corrosion fighter" technology, make MGM "Severe Service" Chambers the best choice for severe operating environments: such as acids, salt, liquid corrosives and concrete.

Includes composite guide with Corrosion Fighter Technology:

NOTE: Product information and specifications subject to change without notice. Refer to the MGM Brakes website for latest updated information.

Long Stroke Model

Combination	Piggyback Plus Kit
VMRS# 013-004-000 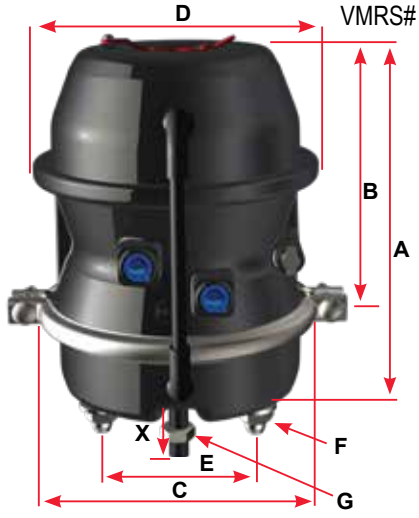	N/A

TR-LP3TSHD Model Features

✓	Tamper Resistant Parking Chamber Design	✓	Center Hole Diaphragms w/Type 30 Spring Side Models
✓	Epoxy Coated Steel Parking Spring Head w/Weatherseal Plug	✓	Corrosion Fighter Composite Spring Guide w/Type 30 & 36 Spring Side Models
✓	A360 Aluminum Center Case w/Release Bolt Storage Pocket	✓	Heavy Duty "Long Life" Power Spring w/Additional Parking Force
✓	Low Friction Internal Push-Rod Polymer Guide w/Nitrile Rubber Air Seal		Reinforced Non-Pressure Chamber Housing w/Welded Mounting Bolts
✓	Epoxy Coated Return & Power Springs	✓	External Breather Tube
✓	Epoxy Coated Heavy-Duty Steel Non-Pressure Chamber Housing	✓	3 inch (76.2 mm) Long Stroke Increases Safety
✓	Epoxy Coated External Piston Rod w/Stroke Alert and Stone Shield	✓	Epoxy Coated Center Case (Inside & Out)
✓	Heavy Duty Reinforced Diaphragms (Oil Resistant Options Available)		

P/N Series	3527	3534
Model	TR2430LP3TSHD	TR3030LP3TSHD
Size	2430	3030
Stroke	3.00" (76.2 mm)	3.00" (76.2 mm)
P/N Combination SAE	3527051	3534051
P/N Combination 12" Rod*	N/A	3534551*
P/N Combination 18" Rod*	N/A	3534651*
P/N Neoprene Diaphragm	3527851	N/A
P/N Welded Yoke (2.25")	3527951	3534951
P/N Piggyback Plus Kit SAE	N/A	N/A
P/N Combination METRIC	3527049	3534049
Wt.Combination	19.5 lb (8.8 kg)	20.4 lb (9.3 kg)
Wt. Single	N/A	N/A
A	10.19" (258.8mm)	9.99" (253.7 mm)
B	7.81" (198.4 mm)	7.61" (193.3 mm)
C	7.38" (187.5 mm)	8.32" (211.3 mm)
D	8.21" (208.5 mm)	8.21" (208.5 mm)
E	4.75" (120.7 mm)	
F	5/8" - 11 UNC (M16 x 1.5 - 6g)	
G	5/8" - 18 UNF (M16 x 1.5 - 6g)	
Inlets	3/8" - 18 NPTF (M16 x 1.5 - 6H)	
X - Min. (in the caged position)	8.00" (203.2 mm)	

* For Transit, Hendrickson Intraax/Vantraax Suspension applications. P/N's ending in XXXX651 have 3/4" push-rod.

Welded Yoke Chamber

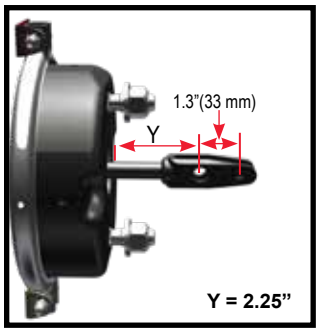

For more welded yoke choices, see page 104-105

NOTE: Product information and specifications subject to change without notice. Refer to the MGM Brakes website for latest updated information.

Replacement Parts			
	P/N Series	3527	3534
	Model	TR2430LP3TSHD	TR3030LP3TSHD
1	Kit - NP Chamber (a)	9015215	9015218
2	Kit - Nuts & Bolts	9003001	9003001
3	Clamp Band Assembly	8216025	8216045
4	Diaphragm	8017424	8017830
5	Kit - Push-Rod Assembly (a) SAE	9064006	9064008
5a	Kit - Push-Rod Assembly (a) METRIC	9064027	9064028
6	Return Spring	8068012	8068012
7	Kit - Center Hole Shield	9065002	9065002
8	NP Chamber Assembly (a)	9015213	9015122
9	Kit - Nuts & Washers SAE	9002001	9002001
9a	Kit - Nuts & Washers METRIC	9002002	9002002
10	Hex Nut - Yoke SAE	8130004	8130004
10a	Hex Nut - Yoke METRIC	8130016	8130016
11	Kit - Weatherseal™ Plug	9019005	9019005
12	Kit - Release Bolt	9007003	9007003
13	Kit - Breather Tube	9081001	9081001
OPTIONAL ITEMS - For additional replacement parts, refer to Section 9			
	Yoke & Welded Yoke Assemblies	For additional replacement parts, refer to Section 9	
	Boot & Retainer	For additional replacement parts, refer to Section 9	

NOTE: (a) To ensure correct stroke alert positioning, these kits must be used only on the designated MGM Brake units.

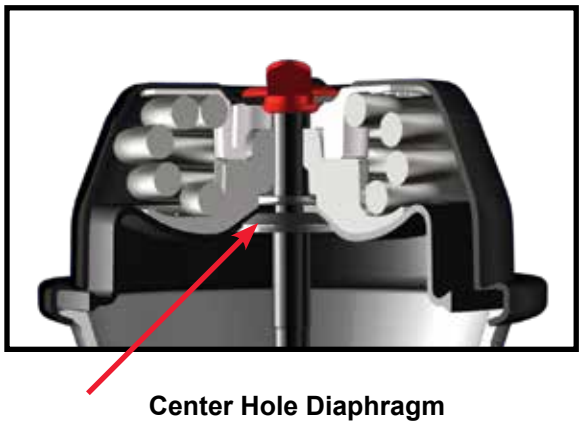

Center Hole Diaphragm

Patented feature that aligns the piston, diaphragm, power spring and internal push-rod providing the following advantages: Maintains component alignment; reduces power spring stress; reduces coil clash; increases center-seal life and eliminates the effects of severe vibration.

NOTE: Product information and specifications subject to change without notice. Refer to the MGM Brakes website for latest updated information.

Long Stroke Model

Combination	Piggyback Plus Kit
VMRS# 013-004-000 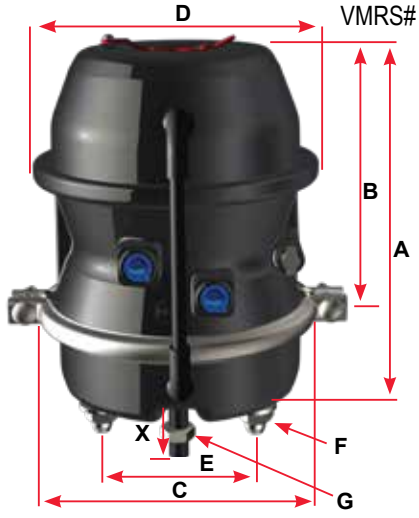	N/A

TR-LP3TSHDW Model Features

✓	Tamper Resistant Parking Chamber Design	✓	Center Hole Diaphragms w/Type 30 Spring Side Models
✓	Epoxy Coated Steel Parking Spring Head w/Weatherseal Plug	✓	Corrosion Fighter Composite Spring Guide w/Type 30 & 36 Spring Side Models
✓	A360 Aluminum Center Case w/Release Bolt Storage Pocket	✓	Heavy Duty "Long Life" Power Spring w/Additional Parking Force
✓	Low Friction Internal Push-Rod Polymer Guide w/Nitrile Rubber Air Seal	✓	Reinforced Non-Pressure Chamber Housing w/Welded Mounting Bolts
✓	Epoxy Coated Return & Power Springs	✓	External Breather Tube
✓	Epoxy Coated Heavy-Duty Steel Non-Pressure Chamber Housing	✓	3 inch (76.2 mm) Long Stroke Increases Safety
✓	Epoxy Coated External Piston Rod w/Stroke Alert and Stone Shield	✓	Epoxy Coated Center Case (Inside & Out)
✓	Heavy Duty Reinforced Diaphragms (Oil Resistant Options Available)		

P/N Series	3545
Model	TR3030LP3TSHDW
Size	3030
Stroke	3.00" (76.2 mm)
P/N Combination SAE	3545051
P/N Neoprene Diaphragm	N/A
P/N Welded Yoke (2.25")	3545951
P/N Piggyback Plus Kit SAE	N/A
P/N Combination METRIC	3545049
Wt. Combination	20.4 lb (9.3 kg)
Wt. Single	N/A
A	9.99" (253.7 mm)
B	7.61" (193.3 mm)
C	8.32" (211.3 mm)
D	8.21" (208.5 mm)
E	4.75" (120.7 mm)
F	5/8" - 11 UNC (M16 x 1.5 - 6g)
G	5/8" - 18 UNF (M16 x 1.5 - 6g)
Inlets	3/8" - 18 NPTF (M16 x 1.5 - 6H)
X - Min. (in the caged position)	8.00" (203.2 mm)

Welded Yoke Chamber

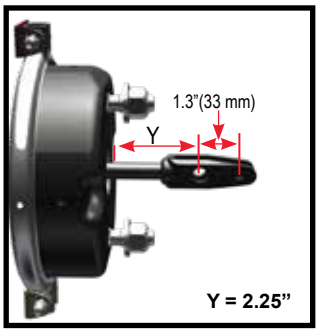

For more welded yoke choices, see page 104-105

NOTE: Product information and specifications subject to change without notice. Refer to the MGM Brakes website for latest updated information.

Replacement Parts		
	P/N Series	3545
	Model	TR3030LP3TSHDW
1	Kit - NP Chamber (a)	9015905
2	Kit - Nuts & Bolts	9003001
3	Clamp Band Assembly	8216045
4	Diaphragm	8017830
5	Kit - Push-Rod Assembly (a) SAE	9064008
5a	Kit - Push-Rod Assembly (a) METRIC	9064028
6	Return Spring	8068012
7	Kit - Center Hole Shield	9065002
8	NP Chamber Assembly (a)	9015259
9	Kit - Nuts & Washers SAE	9002001
9a	Kit - Nuts & Washers METRIC	9002002
10	Hex Nut - Yoke SAE	8130004
10a	Hex Nut - Yoke METRIC	8130016
11	Kit - Weatherseal™ Plug	9019005
12	Kit - Release Bolt	9007003
13	Kit - Breather Tube	9081001
OPTIONAL ITEMS - For additional replacement parts, refer to Section 9		
Yoke & Welded Yoke Assemblies		For additional replacement parts, refer to Section 9
Boot & Retainer		For additional replacement parts, refer to Section 9

NOTE: (a) To ensure correct stroke alert positioning, these kits must be used only on the designated MGM Brake units.

Weld Reinforced Non-Pressure Housing

Heavy-gauge formed steel flat-bottom design, epoxy coated for total corrosion protection and "weld-reinforced" mounting studs for added support in extreme vibration applications. (bolt actually epoxy coated - depicted here lighter for visual purposes)

NOTE: Product information and specifications subject to change without notice. Refer to the MGM Brakes website for latest updated information.

Standard Stroke Model

Combination

VMRS# 013-004-000

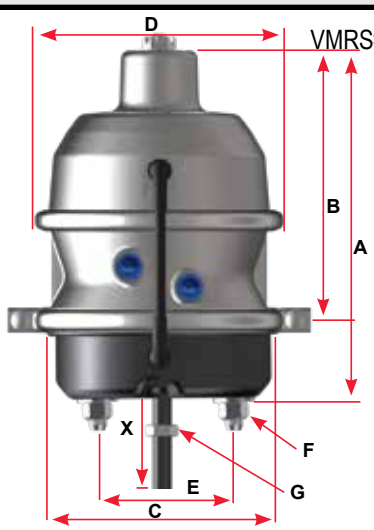

Piggyback Plus Kit

VMRS# 013-004-001

LTR-T Model Features

✓	Tamper Resistant Parking Chamber Design		Center Hole Diaphragms w/Type 30 Spring Side Models
✓	A360 Aluminum Power Spring Head w/Integrated Spring Release Bolt		Corrosion Fighter Composite Spring Guide w/Type 30 & 36 Spring Side Models
✓	Epoxy Coated Heavy-Duty Steel Non-Pressure Chamber Housing	✓	Heavy Duty "Long Life" Power Spring with Additional Parking Force LTR Model: 90 lb. (40.8 kg) @ 1.25 in (31.8 mm) of Stroke
✓	Low Friction Internal Push-Rod Polymer Guide w/Nitrile Rubber Air Seal		Reinforced Non-Pressure Chamber Housing w/Welded Mounting Bolts
✓	Epoxy Coated Return & Power Springs	✓	External Breather Tube
✓	A360 Aluminum Center Case		3 in (76.2 mm) Long Stroke Increases Safety
✓	Epoxy Coated External Piston Rod w/Stroke Alert and Stone Shield	✓	6 Year Limited Warranty
✓	Heavy Duty Reinforced Diaphragms (Oil Resistant Options Available)		

P/N Series	3827	3831
Model	LTR2430LT	LTR3030T
Size	2430	3030
Stroke	2.50" (63.5 mm)	2.50" (63.5mm)
P/N Combination SAE	3827051	3831051
P/N Combination 12" Rod*	N/A	3831551*
P/N Combination 18" Rod*	N/A	3831651*
P/N Neoprene Diaphragm	3827851	N/A
P/N Welded Yoke (2.25")	N/A	N/A
P/N Piggyback Plus Kit SAE	3827008	3831008
P/N Combination METRIC	***	***
Wt.Combination	18.5 lb (8.4 kg)	19.9 lb (9.0 kg)
Wt. Single	11.4 lb (5.2 kg)	11.7 lb (5.3 kg)
A	11.8" (299.7 mm)	11.86" (301.2 mm)
B	9.68" (245.9 mm)	9.46" (240.3 mm)
C	7.38" (187.5 mm)	8.27" (210.1 mm)
D	8.18" (207.8 mm)	8.18" (207.8 mm)
E	4.75" (120.7 mm)	
F	5/8" - 11 UNC (M16 x 1.5 - 6g)	
G	5/8" - 18 UNF (M16 x 1.5 - 6g)	
Inlets	3/8" - 18 NPTF (M16 x 1.5 - 6H)	
X - Min. (in the caged position)	8.00" (203.2 mm)	

* For Transit, Hendrickson Intraax/Vantraax Suspension applications. P/N's ending in XXXX651 have 3/4" push-rod.

***** For information on availability, contact MGM Brakes Customer Service, 1-800-527-1534 (U.S. & Canada), or for International email: mail@mgmbrakes.com**

NOTE: Product information and specifications subject to change without notice. Refer to the MGM Brakes website for latest updated information.

Standard Stroke Model

Replacement Parts			
	P/N Series	3827	3831
	Model	LTR2430LT	LTR3030T
1	Kit - NP Chamber (a)	9015152	9015157
2	Kit - Nuts & Bolts	9003001	9003001
3	Clamp Band Assembly	8216025	8216045
4	Diaphragm	8017141	8017730
5	Kit - Push-Rod Assembly (a) SAE	9064002	9064003
5a	Kit - Push-Rod Assembly (a) METRIC	***	***
6	Return Spring	8068002	8068002
7	Kit - Center Hole Shield	9065002	9065002
8	NP Chamber Assembly (a)	9015151	9015122
9	Kit - Nuts & Washers SAE	9002001	9002001
9a	Kit - Nuts & Washers METRIC	***	***
10	Hex Nut - Yoke SAE	8130004	8130004
10a	Hex Nut - Yoke METRIC	***	***
11	Kit - Breather Tube	9081001	9081001
12	Piggyback Plus Kit SAE	3827008	3831008
OPTIONAL ITEMS - For additional replacement parts, refer to Section 9			
	Yoke Assembly	For additional replacement parts, refer to Section 9	
	Boot & Retainer	For additional replacement parts, refer to Section 9	

NOTE: (a) To ensure correct stroke alert indicator positioning, these kits must be used only in the designated MGM Brakes units.

Integral Manual Release Bolt
Permanently installed, can't get lost. Permits safe, easy release to reline brakes or move vehicle in absence of air pressure.

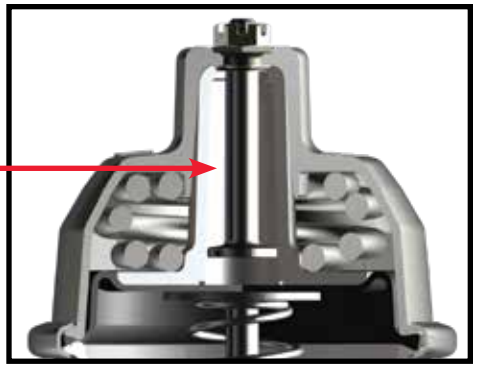

*** For information on availability, contact MGM Brakes Customer Service, 1-800-527-1534 (U.S. & Canada), or for International email: mail@mgmbrakes.com

NOTE: Product information and specifications subject to change without notice. Refer to the MGM Brakes website for latest updated information.

Long Stroke Model

Combination

VMRS# 013-004-000

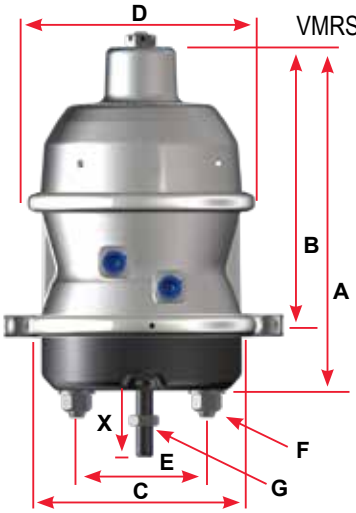

Piggyback Plus Kit

VMRS# 013-004-001

LTR-L3 Model Features

✓	Tamper Resistant Parking Chamber Design		Center Hole Diaphragms w/Type 30 Spring Side Models
✓	A360 Aluminum Power Spring Head w/Integrated Spring Release Bolt		Corrosion Fighter Composite Spring Guide w/Type 30 & 36 Spring Side Models
✓	Epoxy Coated Heavy-Duty Steel Non-Pressure Chamber Housing	✓	Heavy Duty "Long Life" Power Spring w/Additional Parking Force LTR Model: 90 lb. (40.8 kg) @ 1.25 in (31.8 mm) of Stroke
✓	Low Friction Internal Push-Rod Polymer Guide w/Nitrile Rubber Air Seal		Reinforced Non-Pressure Chamber Housing w/Welded Mounting Bolts
✓	Epoxy Coated Return & Power Springs		External Breather Tube
✓	A360 Aluminum Center Case	✓	3 in (76.2 mm) Long Stroke Increases Safety
✓	Epoxy Coated External Piston Rod w/Stroke Alert and Stone Shield		6 Year Limited Warranty
✓	Heavy Duty Reinforced Diaphragms (Oil Resistant Options Available)		

P/N Series	3828	3832
Model	LTR2430L3	LTR3030L3
Size	2430	3030
Stroke	3.00" (76.2 mm)	3.00" (76.2 mm)
P/N Combination SAE	3828051	3832051
P/N Combination 12" Rod*	N/A	3832551*
P/N Combination 18" Rod*	N/A	3832651*
P/N Neoprene Diaphragm	N/A	N/A
P/N Welded Yoke (2.25")	3828951	3832951
P/N Piggyback Plus Kit SAE	3828008	3832008
P/N Combination METRIC	***	***
Wt.Combination	19.3 lb (8.8 kg)	20.5 lb (9.3 kg)
Wt. Single	12.3 lb (5.6 kg)	12.6 lb (5.7 kg)
A	13.0" (330.2 mm)	13.0" (330.2 mm)
B	10.63" (270.0 mm)	10.63" (270.0 mm)
C	7.38" (187.5 mm)	8.27" (210.1 mm)
D	8.18" (207.8 mm)	8.18" (207.8 mm)
E	4.75" (120.7 mm)	
F	5/8" - 11 UNC (M16 x 1.5 - 6g)	
G	5/8" - 18 UNF (M16 x 15 - 6g)	
Inlets	3/8" - 18 NPTF (M16 x 1.5 - 6H)	
X - Min. (in the caged position)	8.00" (203.2 mm)	

Welded Yoke Chamber

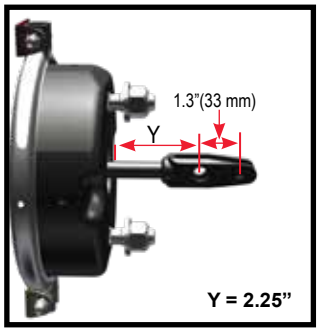

For more welded yoke choices,
see page 104-105

* For Transit, Hendrickson Intraax/Vantraax Suspension applications. P/N's ending in XXXX651 have 3/4" push-rod.

*** For information on availability, contact MGM Brakes Customer Service,
1-800-527-1534 (U.S. & Canada), or for International email: mail@mgmbrakes.com

NOTE: Product information and specifications subject to change without notice. Refer to the MGM Brakes website for latest updated information.

Replacement Parts			
	P/N Series	3828	3832
	Model	LTR2430L3	LTR3030L3
1	Kit - NP Chamber (a)	9015210	9015212
2	Kit - Nuts & Bolts	9003001	9003001
3	Clamp Band Assembly	8216025	8216045
4	Diaphragm	8017424	8017830
5	Kit - Push-Rod Assembly (a) SAE	9064006	9064008
5a	Kit - Push-Rod Assembly (a) METRIC	***	***
6	Return Spring	8068012	8068012
7	Kit - Center Hole Shield	9065002	9065002
8	NP Chamber Assembly (a)	8215200	8215501
9	Kit - Nuts & Washers SAE	9002001	9002001
9a	Kit - Nuts & Washers METRIC	***	***
10	Hex Nut - Yoke SAE	8130004	8130004
10a	Hex Nut - Yoke METRIC	***	***
11	Kit - Piggyback Plus SAE	3828008	3832008
OPTIONAL ITEMS - For additional replacement parts, refer to Section 9			
	Yoke Assembly	For additional replacement parts, refer to Section 9	
	Boot & Retainer	For additional replacement parts, refer to Section 9	

NOTE: (a) To ensure correct stroke alert indicator positioning, these kits must be used only in the designated MGM Brakes units.

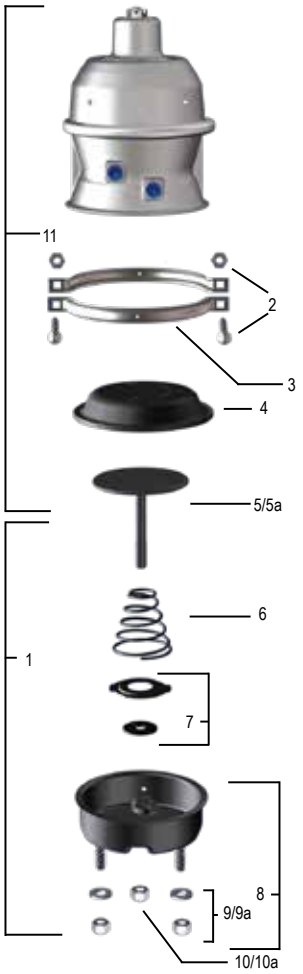

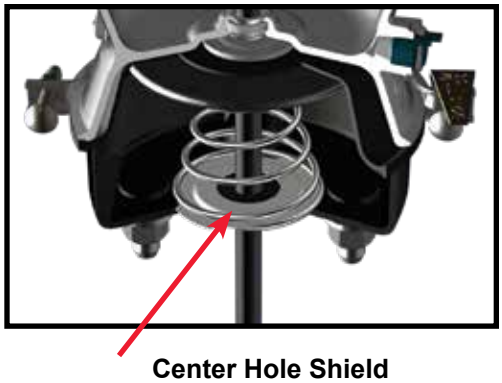

Center Hole Shield

Allows for visual inspection of stroke alert while preventing entry of contaminants.

*** For information on availability, contact MGM Brakes Customer Service, 1-800-527-1534 (U.S. & Canada), or for International email: mail@mgmbrakes.com

NOTE: Product information and specifications subject to change without notice. Refer to the MGM Brakes website for latest updated information.

Long Stroke Model

Combination	Piggyback Plus Kit
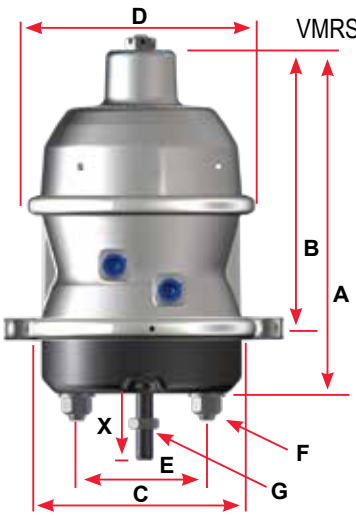 VMRS# 013-004-000	N/A

LTR-L3W Model Features

✓	Tamper Resistant Parking Chamber Design		Center Hole Diaphragms w/Type 30 Spring Side Models
✓	A360 Aluminum Power Spring Head w/Integrated Spring Release Bolt		Corrosion Fighter Composite Spring Guide w/Type 30 & 36 Spring Side Models
✓	Epoxy Coated Heavy-Duty Steel Non-Pressure Chamber Housing	✓	Heavy Duty "Long Life" Power Spring with Additional Parking Force LTR Model: 90 lb. (40.8 kg) @ 1.25 in (31.8 mm) of Stroke
✓	Low Friction Internal Push-Rod Polymer Guide w/Nitrile Rubber Air Seal	✓	Reinforced Non-Pressure Chamber Housing w/Welded Mounting Bolts
✓	Epoxy Coated Return & Power Springs		External Breather Tube
✓	A360 Aluminum Center Case	✓	3 in (76.2 mm) Long Stroke Increases Safety
✓	Epoxy Coated External Piston Rod w/Stroke Alert and Stone Shield		6 Year Limited Warranty
✓	Heavy Duty Reinforced Diaphragms (Oil Resistant Options Available)		

P/N Series	3844
Model	LTR3030L3W
Size	3030
Stroke	3.00" (76.2 mm)
P/N Combination SAE	3844051
P/N Combination 12" Rod*	3844551*
P/N Combination 18" Rod*	N/A
P/N Neoprene Diaphragm	N/A
P/N Welded Yoke (2.25")	3844951
P/N Piggyback Plus Kit SAE	N/A
P/N Combination METRIC	***
Wt.Combination	20.5 lb (9.3 kg)
Wt. Single	N/A
A	13.0" (330.2 mm)
B	10.63" (270.0mm)
C	8.27" (210.1 mm)
D	8.18" (207.8 mm)
E	4.75" (120.7 mm)
F	5/8" - 11 UNC (M16 x 1.5 - 6g)
G	5/8" - 18 UNF (M16 x 1.5 - 6g)
Inlets	3/8" - 18 NPTF (M16 x 1.5 - 6H)
X - Min. (in the caged position)	8.00" (203.2 mm)

Welded Yoke Chamber

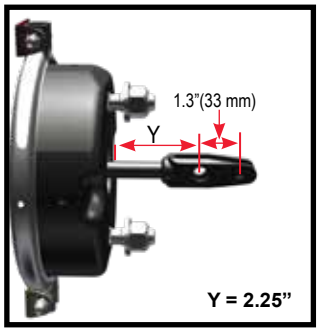

For more welded yoke choices, see page 104-105

* For Transit, Hendrickson Intraax/Vantraax Suspension applications. P/N's ending in XXXX651 have 3/4" push-rod.

*** For information on availability, contact MGM Brakes Customer Service, 1-800-527-1534 (U.S. & Canada), or for International email: mail@mgmbrakes.com

NOTE: Product information and specifications subject to change without notice. Refer to the MGM Brakes website for latest updated information.

Replacement Parts		
	P/N Series	3844
	Model	LTR3030L3W
1	Kit - NP Chamber (a)	N/A
2	Kit - Nuts & Bolts	9003001
3	Clamp Band Assembly	8216045
4	Diaphragm	8017830
5	Kit - Push-Rod Assembly (a) SAE	9064008
5a	Kit - Push-Rod Assembly (a) METRIC	***
6	Return Spring	8068012
7	Kit - Center Hole Shield	9065002
8	NP Chamber Assembly (a)	9015260
9	Kit - Nuts & Washers SAE	9002001
9a	Kit - Nuts & Washers METRIC	***
10	Hex Nut - Yoke SAE	8130004
10a	Hex Nut - Yoke METRIC	***
OPTIONAL ITEMS - For additional replacement parts, refer to Section 9		
	Yoke Assembly	For additional replacement parts, refer to Section 9
	Boot & Retainer	For additional replacement parts, refer to Section 9

NOTE: (a) To ensure correct stroke alert indicator positioning, these kits must be used only in the designated MGM Brakes units.

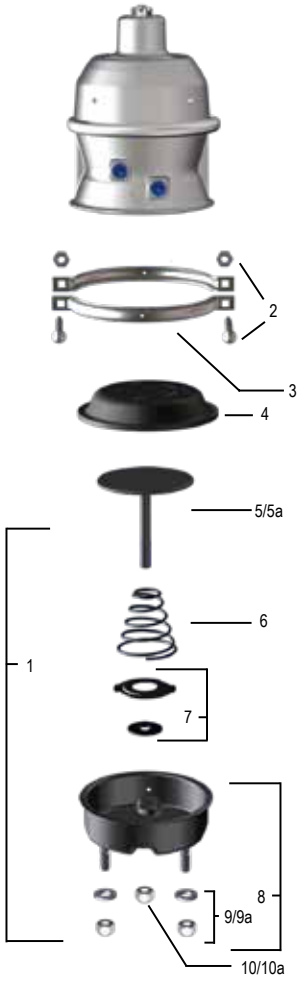

Weld Reinforced Non-Pressure Housing

Heavy-gauge formed steel flat-bottom design, epoxy coated for total corrosion protection and “weld-reinforced” mounting studs for added support in extreme vibration applications. (bolt actually epoxy coated - depicted here lighter for visual purposes)

*** For information on availability, contact MGM Brakes Customer Service, 1-800-527-1534 (U.S. & Canada), or for International email: mail@mgmbrakes.com

NOTE: Product information and specifications subject to change without notice. Refer to the MGM Brakes website for latest updated information.

Long Stroke Model

Combination	Piggyback Plus Kit
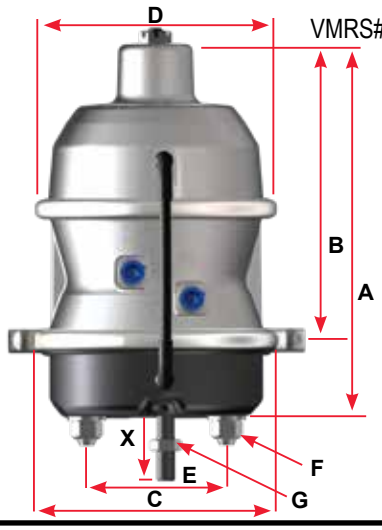 VMRS# 013-004-000	N/A

LTR-L3T Model Features

✓	Tamper Resistant Parking Chamber Design		Center Hole Diaphragms w/Type 30 Spring Side Models
✓	A360 Aluminum Power Spring Head w/Integrated Spring Release Bolt		Corrosion Fighter Composite Spring Guide w/Type 30 & 36 Spring Side Models
✓	Epoxy Coated Heavy-Duty Steel Non-Pressure Chamber Housing	✓	Heavy Duty "Long Life" Power Spring w/Additional Parking Force LTR Model: 90 lb. (40.8 kg) @ 1.25 in (31.8 mm) of Stroke
✓	Low Friction Internal Push-Rod Polymer Guide w/Nitrile Rubber Air Seal		Reinforced Non-Pressure Chamber Housing w/Welded Mounting Bolts
✓	Epoxy Coated Return & Power Springs	✓	External Breather Tube
✓	A360 Aluminum Center Case	✓	3 in (76.2 mm) Long Stroke Increases Safety
✓	Epoxy Coated External Piston Rod w/Stroke Alert and Stone Shield	✓	6 Year Limited Warranty
✓	Heavy Duty Reinforced Diaphragms (Oil Resistant Options Available)		

P/N Series	3833
Model	LTR3030L3T
Size	3030
Stroke	3.00" (76.2 mm)
P/N Combination SAE	3833051
P/N Combination 12" Rod*	3833551*
P/N Combination 18" Rod*	N/A
P/N Neoprene Diaphragm	N/A
P/N Welded Yoke (2.25")	3833951
P/N Piggyback Plus Kit SAE	N/A
P/N Combination METRIC	***
Wt.Combination	20.5 lb (9.3 kg)
Wt. Single	N/A
A	13.0" (330.2 mm)
B	10.63" (270.0mm)
C	8.27" (210.1 mm)
D	8.18" (207.8 mm)
E	4.75" (120.7 mm)
F	5/8" - 11 UNC (M16 x 1.5 - 6g)
G	5/8" - 18 UNF (M16 x 1.5 - 6g)
Inlets	3/8" - 18 NPTF (M16 x 1.5 - 6H)
X - Min. (in the caged position)	8.00" (203.2 mm)

Welded Yoke Chamber

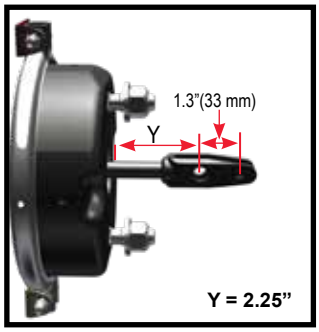

For more welded yoke choices, see page 104-105

* For Transit, Hendrickson Intraax/Vantraax Suspension applications. P/N's ending in XXXX651 have 3/4" push-rod.

*** For information on availability, contact MGM Brakes Customer Service, 1-800-527-1534 (U.S. & Canada), or for International email: mail@mgmbrakes.com

NOTE: Product information and specifications subject to change without notice. Refer to the MGM Brakes website for latest updated information.

Replacement Parts		
	P/N Series	3833
	Model	LTR3030L3T
1	Kit - NP Chamber (a)	N/A
2	Kit - Nuts & Bolts	9003001
3	Clamp Band Assembly	8216045
4	Diaphragm	8017830
5	Kit - Push-Rod Assembly (a) SAE	9064003
5a	Kit - Push-Rod Assembly (a) METRIC	***
6	Return Spring	8068012
7	Kit - Center Hole Shield	9065002
8	NP Chamber Assembly (a)	9015122
9	Kit - Nuts & Washers SAE	9002001
9a	Kit - Nuts & Washers METRIC	***
10	Hex Nut - Yoke SAE	8130004
10a	Hex Nut - Yoke METRIC	***
11	External Breather Tube	9081001
OPTIONAL ITEMS - For additional replacement parts, refer to Section 9		
	Yoke Assembly	For additional replacement parts, refer to Section 9
	Boot & Retainer	For additional replacement parts, refer to Section 9

NOTE: (a) To ensure correct stroke alert indicator positioning, these kits must be used only in the designated MGM Brakes units.

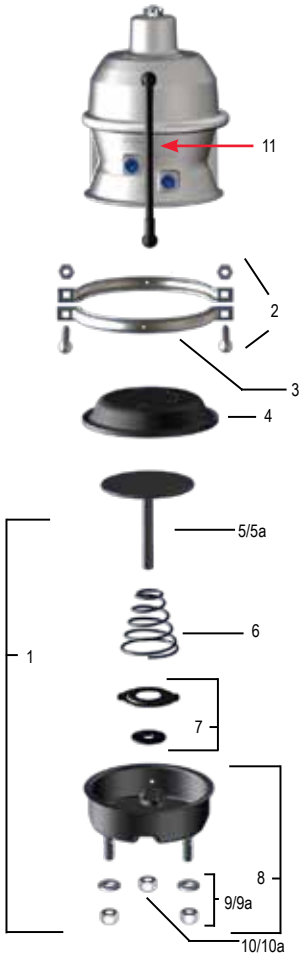

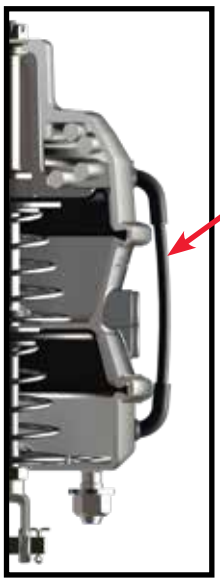

External Breather-Tube
Vents air from inside the protected area of the non-pressure chamber to effectively prevent entry of liquid and solid corrosive contaminants that can cause premature failure of the spring brake chamber.

*** For information on availability, contact MGM Brakes Customer Service,
1-800-527-1534 (U.S. & Canada), or for International email: mail@mgmbrakes.com

NOTE: Product information and specifications subject to change without notice. Refer to the MGM Brakes website for latest updated information.

Long Stroke Model

Combination

VMRS# 013-004-000

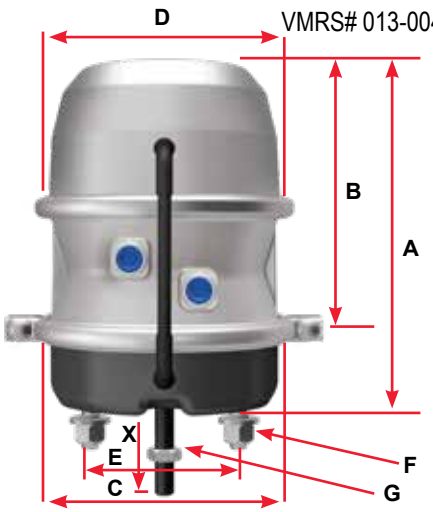

Piggyback Plus Kit

VMRS# 013-004-001

LTS Model Features

✓	Tamper Resistant Parking Chamber Design	✓	Center Hole Diaphragms w/Type 30 Spring Side Models
✓	A360 Aluminum Power Spring Head w/Integrated Spring Release Bolt	✓	Corrosion Fighter Composite Spring Guide w/Type 30 Spring Side Models
✓	Epoxy Coated Heavy-Duty Steel Non-Pressure Chamber Housing	✓	Heavy Duty "Long Life" Power Spring w/Additional Parking Force LTS Model: 90 lb. (40.8 kg) @ 1.25 in (31.8 mm) of Stroke
✓	Low Friction Internal Push-Rod Polymer Guide with Nitrile Rubber Air Seal		Reinforced Non-Pressure Chamber Housing w/Welded Mounting Bolts
✓	Epoxy Coated Return & Power Springs	✓	External Breather Tube
✓	A360 Aluminum Center Case	✓	3 in (76.2 mm) Long Stroke Increases Safety
✓	Epoxy Coated External Piston Rod w/Stroke Alert and Stone Shield	✓	6 Year Limited Warranty
✓	Heavy Duty Reinforced Diaphragms		

P/N Series	LTS3030ET
Model	LTS3030ET
Size	3030
Stroke	3.00" (76.2 mm)
P/N Combination SAE	LTS3030ET051
P/N Combination 12" Rod*	LTS3030ET551
P/N Combination 18" Rod	LTS3030ET651
P/N Neoprene Diaphragm	N/A
P/N Welded Yoke (2.25")	LTS3030ET951
P/N Piggyback Plus Kit SAE	LTS3030ET008
P/N Combination METRIC	LTS3030ET050
Wt.Combination	20.5 lb (9.3 kg)
Wt. Single	11.5 lb (5.2 kg)
A	10.5" (266.7 mm)
B	8.19" (208.0 mm)
C	8.27" (210.1 mm)
D	8.18" (207.8 mm)
E	4.75" (120.7 mm)
F	5/8" - 11 UNC (M16 x 1.5 -6g)
G	5/8" - 18 UNC (M16 x 1.5 -6g)
Inlets	3/8" - 18 NPTF (M16 x 1.5 -6H)
X - Min. (in the caged position)	8.00" (203.2 mm)

NOTE:

1. The LTS Long-Life chamber is available in long stroke (3.00") for service on drum braked vehicles only.

2. The LTS Long-Life piggyback plus kit can be used as a replacement on the LTR-L3, LTR-L3W, and the LTR-L3T.

* For Transit, Hendrickson Intraax/Vantraax Suspension applications. P/N's ending in LTSXXXXET651 have 3/4" push-rod.

***** For information on availability, contact MGM Brakes Customer Service, 1-800-527-1534 (U.S. & Canada), or for International email: mail@mgmbrakes.com**

NOTE: Product information and specifications subject to change without notice. Refer to the MGM Brakes website for latest updated information.

Replacement Parts		
	P/N Series	LTS3030ET
	Model	LTS3030ET
1	Kit - NP Chamber (a)	N/A
2	Kit - Nuts & Bolts	9003001
3	Clamp Band Assembly	8216045
4	Diaphragm	8017830
5	Kit - Push-Rod Assembly (a) SAE	9054030
5a	Kit - Push-Rod Assembly (a) METRIC	N/A
6	Return Spring	8068022
7	Kit - Center Hole Shield	9065002
8	NP Chamber Assembly (a)	9015122
9	Kit - Nuts & Washers SAE	9002001
9a	Kit - Nuts & Washers METRIC	N/A
10	Hex Nut - Yoke SAE	8130004
10a	Hex Nut - Yoke METRIC	N/A
11	External Breather Tube	9081001
12	Piggyback Plus Kit SAE	LTS3030ET008
OPTIONAL ITEMS - For additional replacement parts, refer to Section 9		
	Yoke Assembly	For additional replacement parts, refer to Section 9
	Boot & Retainer	For additional replacement parts, refer to Section 9

NOTE: (a) To ensure correct stroke alert indicator positioning, these kits must be used only in the designated MGM Brakes units.

2.5" HEIGHT REDUCTION

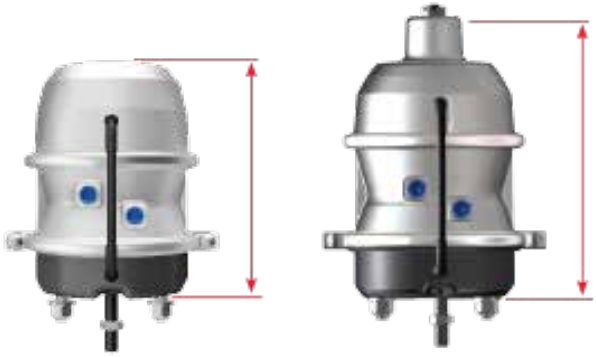

LTS3030ET **LTR-L3T**

NOTE: NPC shown here with welded yoke option.

***** For information on availability, contact MGM Brakes Customer Service, 1-800-527-1534 (U.S. & Canada), or for International email: mail@mgmbrakes.com**

NOTE: Product information and specifications subject to change without notice. Refer to the MGM Brakes website for latest updated information.

Standard Stroke Model

Performance Plus

Combination

VMRS# 013-004-000

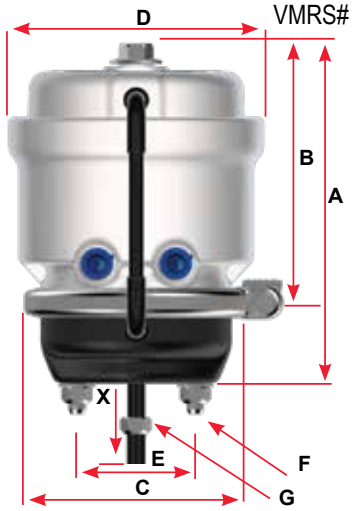

Piggyback Plus Kit

VMRS# 013-004-001

MJS-AT 1.75” (44.5 mm) Model Features

✓	Tamper Resistant Parking Chamber Design		Corrosion Fighter Composite Spring Guide w/Type 30 & 36 Spring Side Models
	Epoxy Coated Steel Power Spring Head w/Integrated Release Bolt	✓	Lighter/Compact/Low Profile Design
✓	A360 Aluminum Center Case	✓	Reinforced Non-Pressure Chamber Housing w/Welded Mounting Bolts
✓	Low Friction Internal Push-Rod Polymer Guide w/Nitrile Rubber Air Seal	✓	External Breather Tube
✓	Epoxy Coated Return & Power Springs		3 in (76.2 mm) Long Stroke Increases Safety
✓	Epoxy Coated External Piston Rod w/Stroke Alert and Stone Shield		Heavy Duty Reinforced Diaphragms (Oil Resistant Options Available)

P/N Series	MJS1216AT
Model	MJS1216AT
Size	1216
Stroke	1.75” (44.5 mm)
P/N Combination SAE	MJS1216AT051
P/N Welded Yoke (2.25”)	N/A
P/N Piggyback Plus Kit SAE	N/A
P/N Combination METRIC	MJS1216AT049
Wt.Combination	12.5 lb (5.7 kg)
Wt. Single	8.70 lb (3.9 kg)
A	8.62” (218.9 mm)
B	6.59” (167.4 mm)
C	5.70” (144.8 mm)
D	6.46” (164.1 mm)
E	3.00” (76.2 mm)
F	7/16” - 14 UNC
G	1/2” - 20 UNF (M16 x 1.5 - 6g)
Inlets	3/8” - 18 NPTF (M16 x 1.5 - 6H)
X -Min (in the caged position)	8.00” (203.2 mm)

NOTE: Product information and specifications subject to change without notice. Refer to the MGM Brakes website for latest updated information.

Performance Plus

Standard Stroke Model

Replacement Parts		
	P/N Series	MJS1216AT
	Model	MJS1216AT
1	Kit - NP Chamber (a)	9015242
2	Kit - Nuts & Bolts	9003002
3	Clamp Band Assembly	8216012
4	Diaphragm	8017312
5	Kit - Push-Rod Assembly (a) SAE	9064010
5a	Kit - Push-Rod Assembly (a) METRIC	9064034
6	Return Spring	8068007
7	NP Chamber Assembly (a)	8215198
8	Kit - Nuts & Washers SAE	9002003
9	Hex Nut - Yoke SAE	8130011
9a	Hex Nut - Yoke METRIC	8130016
10	Kit - Breather Tube	9081001
11	Kit - Piggyback Plus SAE	N/A
OPTIONAL ITEMS - For additional replacement parts, refer to Section 9		
	Yoke Assembly	For additional replacement parts, refer to Section 9

NOTE: (a) To ensure correct stroke alert indicator positioning, these kits must be used only in the designated MGM Brakes units.

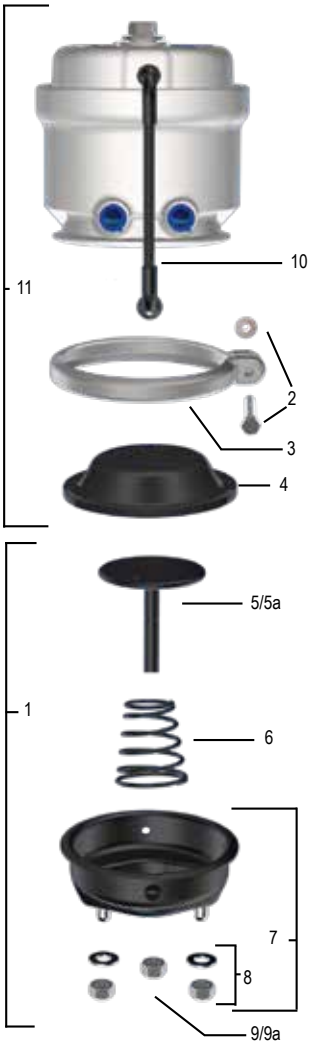

Release Bolt

Patented "Dual Thread Release Bolt" design, an MGM Brakes exclusive, provides minimal bolt protrusion at maximum release. (Approx. 1.00 inch (25.4 mm) protrusion when manually released)

NOTE: Product information and specifications subject to change without notice. Refer to the MGM Brakes website for latest updated information.

Long Stroke Model

Performance Plus

Combination

VMRS# 013-004-000

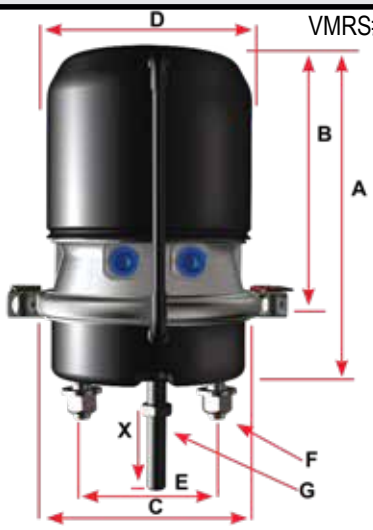

Piggyback Plus Kit

VMRS# 013-004-001

MJS-ET 3.00” (76.2 mm) Model Features

✓	Tamper Resistant Parking Chamber Design		Corrosion Fighter Composite Spring Guide w/Type 30 & 36 Spring Side Models
✓	Epoxy Coated Steel Power Spring Head w/Integrated Release Bolt	✓	Lighter/Compact/Low Profile Design
✓	A360 Aluminum Center Case	✓	Reinforced Non-Pressure Chamber Housing w/Welded Mounting Bolts
✓	Low Friction Internal Push-Rod Polymer Guide w/Nitrile Rubber Air Seal	✓	External Breather Tube
✓	Epoxy Coated Return & Power Springs	✓	3 in (76.2 mm) Long Stroke Increases Safety
✓	Epoxy Coated External Piston Rod w/Stroke Alert and Stone Shield		Heavy Duty Reinforced Diaphragms (Oil Resistant Options Available)

P/N Series	MJS1724ET	MJS2024ET
Model	MJS1724ET	MJS2024ET
Size	1724	2024
Stroke	3.00” (76.2 mm)	3.00” (76.2 mm)
P/N Combination SAE	MJS1724ET051	MJS2024ET051
P/N Combination 12” Rod*	N/A	MJS2024ET551*
P/N Combination 18” Rod*	N/A	N/A
P/N Welded Yoke (2.25”)	N/A	N/A
P/N Piggyback Plus Kit SAE	MJS1724ET008	MJS2024ET008
P/N Combination METRIC	MJS1724ET049	MJS2024ET049
Wt.Combination	20.32 lb (9.2 kg)	20.32 lb (9.2 kg)
Wt. Single	13.50 lb (6.1 kg)	13.50 lb (6.1 kg)
A	10.69” (271.5 mm)	10.69” (271.5 mm)
B	7.94” (201.7 mm)	7.94” (201.7 mm)
C	6.86” (174.2 mm)	6.86” (174.2 mm)
D	6.76” (171.7 mm)	6.76” (171.7 mm)
E	4.75” (120.7 mm)	
F	M16 x 1.5 - 6g	
G	5/8” - 18 UNF (M16 x 1.5 - 6g)	
Inlets	3/8” - 18 NPTF (M16 x 1.5 - 6H)	

* For Transit, Hendrickson Intraax/Vantraax Suspension applications. P/N’s ending in MJSXXXXET651 have 3/4” push-rod.

NOTE: Product information and specifications subject to change without notice. Refer to the MGM Brakes website for latest updated information.

Performance Plus

Long Stroke Model

Replacement Parts			
P/N Series		MJS1724ET	MJS2024ET
Model		MJS1724ET	MJS2024ET
1	Kit - NP Chamber (a)	9015240	9015239
2	Kit - Nuts & Bolts	9003001	9003001
3	Clamp Band Assembly	8216020	8216020
4	Diaphragm	8017215	8017820
5	Kit - Push-Rod Assembly (a) SAE	8264532	8264039
5a	Kit - Push-Rod Assembly (a) METRIC	9064031	9064030
6	Return Spring	8068021	8068021
7	Kit - Center Hole Shield	9065003	9065003
8	NP Chamber Assembly (a)	9015238	9015238
9	Kits - Nuts & Washers SAE	N/A	N/A
9a	Kit - Nuts & Washers METRIC	9002002	9002002
10	Hex Nut - Yoke SAE	8130004	8130004
10a	Hex Nut - Yoke METRIC	8130016	8130016
11	Kit - Breather Tube	9081001	9081001
12	Kit - Piggyback Plus SAE	MJS1724ET008	MJS2024ET008
OPTIONAL ITEMS - For additional replacement parts, refer to Section 9			
Yoke Assembly		For additional replacement parts, refer to Section 9	
Boot & Retainer		For additional replacement parts, refer to Section 9	

NOTE: (a) To ensure correct stroke alert positioning, these kits must be used only on the designated MGM Brake units.
(b) Kit contains metric push-rod and mounting bolts.

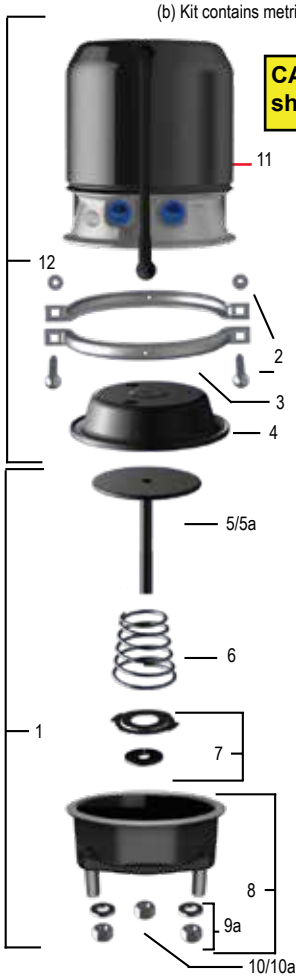

CAUTION: The brakes listed on this page may have a diamond NPC. They should not be mounted with the mounting bolt horizontal to the ground.

Release Bolt
Patented "Dual Thread Release Bolt" design, an MGM Brakes exclusive, provides minimal bolt protrusion at maximum release. (Approx. 1.25") (31.8 mm) protrusion when manually released)

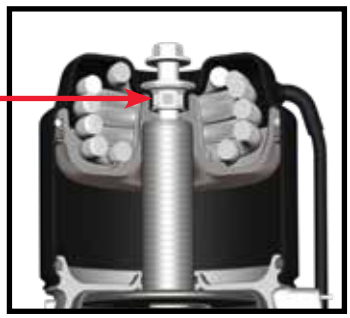

NOTE: Product information and specifications subject to change without notice. Refer to the MGM Brakes website for latest updated information.

Long Stroke Model

Performance Plus

Combination

VMRS# 013-004-000

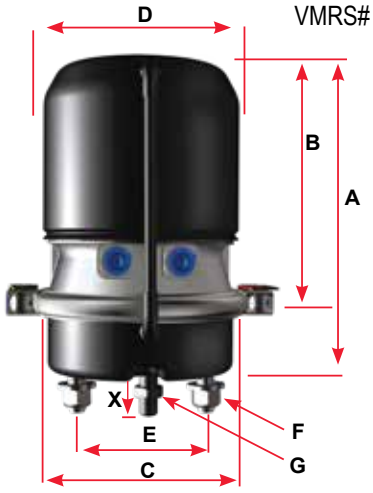

Piggyback Plus Kit

VMRS# 013-004-001

MJS-ET 3.00” (76.2 mm) Model Features

✓	Tamper Resistant Parking Chamber Design		Corrosion Fighter Composite Spring Guide w/Type 30 & 36 Spring Side Models
✓	Epoxy Coated Steel Power Spring Head w/Integrated Release Bolt	✓	Lighter/Compact/Low Profile Design
✓	A360 Aluminum Center Case	✓	Reinforced Non-Pressure Chamber Housing w/Welded Mounting Bolts
✓	Low Friction Internal Push-Rod Polymer Guide w/Nitrile Rubber Air Seal	✓	External Breather Tube
✓	Epoxy Coated Return & Power Springs	✓	3 in (76.2 mm) Long Stroke Increases Safety
✓	Epoxy Coated External Piston Rod w/Stroke Alert and Stone Shield		Heavy Duty Reinforced Diaphragms (Oil Resistant Options Available)

P/N Series	MJS2424ET	MJS2430ET	MJS3024ET
Model	MJS2424ET	MJS2430ET	MJS3024ET
Size	2424	2430	3024
Stroke (in/mm)	3.00” (76.2 mm)	3.00” (76.2 mm)	3.00” (76.2 mm)
P/N Combination SAE	MJS2424ET051	MJS2430ET051	MJS3024ET051
P/N Combination 12” Rod*	MJS2424ET551*	N/A	MJS3024ET551*
P/N Combination 18” Rod*	N/A	N/A	MJS3024ET651*
P/N Welded Yoke (2.25”)	MJS2424ET951	N/A	MJS3024ET951
P/N Piggyback Plus Kit SAE	MJS2424ET008	MJS2430ET008	MJS3024ET008
P/N Combination METRIC	MJS2424ET049	MJS2430ET049	MJS3024ET049
Wt.Combination	20.40 lb (9.3 kg)	23.70 lb (10.8 kg)	22.80 lb (10.3 kg)
Wt. Single	13.50 lb (6.1 kg)	16.26 lb (7.4 kg)	14.60 lb (6.6 kg)
A	10.40” (264.2 mm)	10.70” (271.8 mm)	10.32” (262.1 mm)
B	7.94” (201.7 mm)	8.43” (214.1 mm)	7.94” (201.7 mm)
C	7.48” (190.0 mm)	7.48” (190.0 mm)	8.32” (211.3 mm)
D	6.76” (171.7 mm)	7.51” (190.8 mm)	6.76” (171.7 mm)
E	4.75” (120.7 mm)		
F	5/8” - 11 UNC (M16 x 1.5 - 6g)		
G	5/8” - 18 UNF (M16 x 1.5 - 6g)		
Inlets			
X - Min. (in the caged position)			

* For Transit, Hendrickson Intraax/Vantraax Suspension applications. P/N’s ending in MJSXXXXET651 have 3/4” push-rod.

NOTE: Product information and specifications subject to change without notice. Refer to the MGM Brakes website for latest updated information.

Performance Plus

Long Stroke Model

Replacement Parts				
	P/N Series	MJS2424ET	MJS2430ET	MJS3024ET
	Model	MJS2424ET	MJS2430ET	MJS3024ET
1	Kit - NP Chamber (a)	9015215	9015215	9015218
2	Kit - Nuts & Bolts	9003001	9003001	9003001
3	Clamp Band Assembly	8216025	8216025	8216045
4	Diaphragm	8017424	8017926	8017830
5	Kit - Push-Rod Assembly (a) SAE	9064006	9064006	9064008
5a	Kit - Push-Rod Assembly (a) METRIC	9064027	9064027	9064028
6	Return Spring	8068022	8068022	8068022
7	Kit - Center Hole Shield	9065002	9065002	9065002
8	NP Chamber Assembly (a)	9015213	9015213	9015122
9	Kit - Nuts & Washers SAE	9002001	9002001	9002001
9a	Kit - Nuts & Washers METRIC	9002002	9002002	9002002
10	Hex Nut - Yoke SAE	8130004	8130004	8130004
10a	Hex Nut - Yoke METRIC	8130016	8130016	8130016
11	Kit - Breather Tube	9081001	9081001	9081001
12	Kit - Piggyback Plus SAE	MJS2424ET008	MJS2430ET008	MJS3024ET008
OPTIONAL ITEMS - For additional replacement parts, refer to Section 9				
Yoke Assembly		For additional replacement parts, refer to Section 9		
Boot & Retainer		For additional replacement parts, refer to Section 9		

NOTE: (a) To ensure correct stroke alert positioning, these kits must be used only on the designated MGM Brake units.

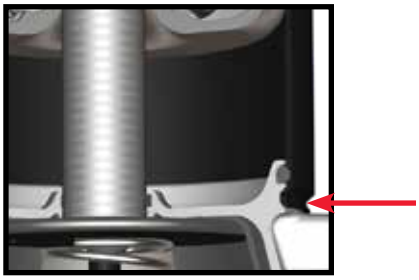

"Roll-In" Tamper Resistant Design
Patented design permanently locks heavy-gauge steel head to the rugged, non-corrosive alloy A360 aluminum center case preventing inadvertent disassembly of the power spring housing.

Welded Yoke Chamber

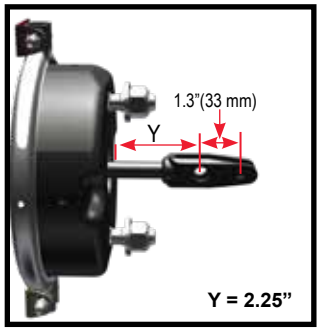

For more welded yoke choices, see page 104-105

NOTE: Product information and specifications subject to change without notice. Refer to the MGM Brakes website for latest updated information.

Long Stroke Model

Performance Plus

Combination

VMRS# 013-004-000

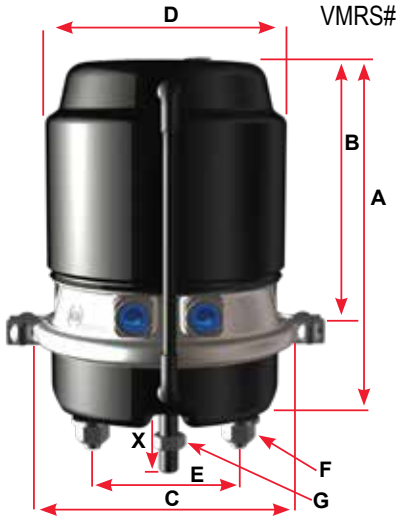

Piggyback Plus Kit

VMRS# 013-004-001

MJS-ET 3.00” (76.2 mm) Model Features

✓	Tamper Resistant Parking Chamber Design		Corrosion Fighter Composite Spring Guide w/Type 30 & 36 Spring Side Models
✓	Epoxy Coated Steel Power Spring Head w/Integrated Release Bolt	✓	Lighter/Compact/Low Profile Design
✓	A360 Aluminum Center Case	✓	Reinforced Non-Pressure Chamber Housing w/Welded Mounting Bolts
✓	Low Friction Internal Push-Rod Polymer Guide w/Nitrile Rubber Air Seal	✓	External Breather Tube
✓	Epoxy Coated Return & Power Springs	✓	3 in (76.2 mm) Long Stroke Increases Safety
✓	Epoxy Coated External Piston Rod w/Stroke Alert and Stone Shield		Heavy Duty Reinforced Diaphragms (Oil Resistant Options Available)

P/N Series	MJS2030ET	MJS3028ET	MJS3030ET	MJS3628ET**	MJS3630ET**
Model	MJS2030ET	MJS3028ET	MJS3030ET	MJS3628ET**	MJS3630ET**
Size	2030	3028	3030	3628	3630
Stroke (in/mm)	3.00” (76.2 mm)	3.00” (76.2 mm)	3.00” (76.2 mm)	3.00” (76.2 mm)	3.00” (76.2 mm)
P/N Combination SAE	MJS2030ET051	MJS3028ET051	MJS3030ET051	MJS3628ET051	MJS3630ET051
P/N Combination 12” Rod*	N/A	MJS3028ET551*	MJS3030ET551*	MJS3628ET551*	MJS3630ET551*
P/N Combination 18” Rod*	N/A	MJS3028ET651*	MJS3030ET651*	N/A	N/A
P/N Welded Yoke (2.25”)	N/A	MJS3028ET951	MJS3030ET951	N/A	MJS3630ET951
P/N Piggyback Plus Kit SAE	MJS2030ET008	MJS3028ET008	MJS3030ET008	MJS3628ET008	MJS3630ET008
P/N Combination METRIC	MJS2030ET049	MJS3028ET049	MJS3030ET049	MJS3628ET049	MJS3630ET049
Wt.Combination	22.70 lb (10.3 kg)	23.10 lb (10.5 kg)	23.10 lb (10.5 kg)	25.20 lb (11.4 kg)	25.20 lb (11.4 kg)
Wt. Single	14.90 lb (6.8 kg)	14.92 lb (6.8 kg)	14.92 lb (6.8 kg)	14.50 lb (6.6 kg)	14.50 lb (6.6 kg)
A	10.99” (279.1 mm)	10.73” (272.5 mm)	10.73” (272.5 mm)	11.06” (280.9 mm)	11.06” (280.9 mm)
B	8.32” (214.1 mm)	8.43” (214.1 mm)	8.43” (214.1 mm)	8.43” (214.1 mm)	8.43” (214.1 mm)
C	6.86” (174.2 mm)	8.32” (211.3 mm)	8.32” (211.3 mm)	9.40” (238.8 mm)	9.40” (238.8 mm)
D	7.50” (190.5 mm)	7.51” (190.8 mm)	7.51” (190.8 mm)	7.51” (190.8 mm)	7.51” (190.8 mm)
E	4.75” (120.7 mm)				
F	5/8” - 11 UNC (M16 x 1.5 - 6g)				
G	5/8” - 18 UNF (M16 x 1.5 - 6g)				
Inlets	3/8” - 18 NPTF (M16 x 1.5 - 6H)				
X - Min. (in the caged position)	8.00” (203.2 mm)				

* For Transit, Hendrickson Intraax/Vantraax Suspension applications. P/N’s ending in MJSXXXXET651 have 3/4” push-rod.
** MJS3628ET & MJS3630ET not “3-inch long stroke” unit, readjustment limit 2.25” per MVM (Motor Vehicle Manufacturers Association)

NOTE: Product information and specifications subject to change without notice. Refer to the MGM Brakes website for latest updated information.

Performance Plus

Long Stroke Model

Replacement Parts						
	P/N Series	MJS2030ET	MJS3028ET	MJS3030ET	MJS3628ET**	MJS3630ET**
	Model	MJS2030ET	MJS3028ET	MJS3030ET	MJS3628ET**	MJS3630ET**
1	Kit - NP Chamber (a)	9015239	9015218	9015218	9015109	9015109
2	Kit - Nuts & Bolts	9003001	9003001	9003001	9003001	9003001
3	Clamp Band Assembly	8216020	8216045	8216045	8216036	8216036
4	Diaphragm	8017820	8017838	8017838	8017840	8017840
5	Kit - Push-Rod Assembly (a) SAE	8264039	9064008	9064008	9064004	9064004
5a	Kit - Push-Rod Assembly (a) METRIC	9064030	9064028	9064028	9064009	9064009
6	Return Spring	8068021	8068022	8068022	8068022	8068022
7	Kit - Center Hole Shield	9065003	9065002	9065002	9065002	9065002
8	NP Chamber Assembly (a)	9015238	9015122	9015122	9015108	9015108
9	Kit - Nuts & Washers SAE	N/A	9002001	9002001	9002001	9002001
9a	Kit - Nuts & Washers METRIC	9002002	9002002	9002002	9002002	9002002
10	Hex Nut - Yoke SAE	8130004	8130004	8130004	8130004	8130004
10a	Hex Nut - Yoke METRIC	8130016	8130016	8130016	8130016	8130016
11	Kit - Breather Tube	9081001	9081001	9081001	9081001	9081001
12	Kit - Piggyback Plus SAE	MJS2030ET008	MJS3028ET008	MJS3030ET008	MJS3628ET008	MJS3630ET008
OPTIONAL ITEMS - For additional replacement parts, refer to Section 9						
Yoke Assembly		For additional replacement parts, refer to Section 9				
Boot & Retainer		For additional replacement parts, refer to Section 9				

NOTE: (a) To ensure correct stroke alert positioning, these kits must be used only on the designated MGM Brake units.
**MJS3628ET & MJS3630ET not "3-inch long stroke" unit, readjustment limit 2.25" per MVMA (Motor Vehicle Manufacturers Association)

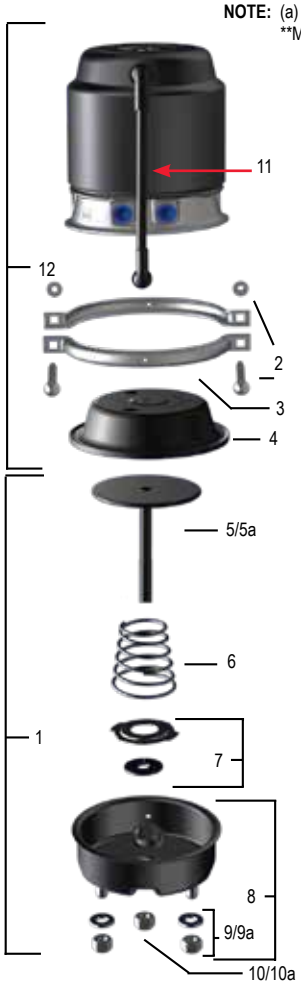

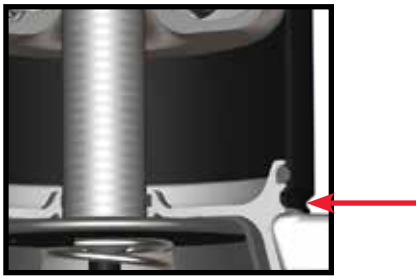

"Roll-In" Tamper Resistant Design
Patented design permanently locks heavy-gauge steel head to the rugged, non-corrosive alloy A360 aluminum center case preventing inadvertent disassembly of the power spring housing.

Welded Yoke Chamber

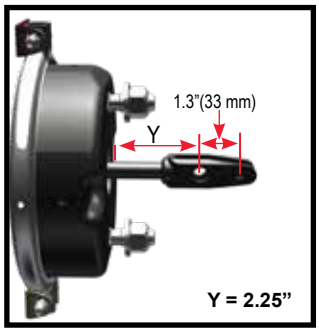

For more welded yoke choices, see page 104-105

NOTE: J-Series Type 30 Spring Side has 490 lbs. more force output than a TR 36 Spring Side at 1.25" Stroke. (see technical section for details)

NOTE: Product information and specifications subject to change without notice. Refer to the MGM Brakes website for latest updated information.

Standard Stroke Model

C

VMRS# 013-004-027

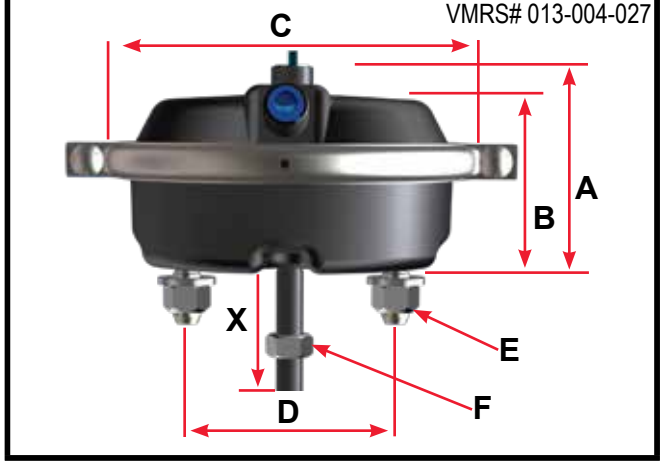

C Model Features

✓	Epoxy Coated Formed Steel Pressure Cap & Non-Pressure Housing
✓	Heavy-Duty Reinforced Diaphragms (Oil Resistant Options Available)
✓	Epoxy Coated External Piston Rod w/Stroke Alert and Stone Shield
✓	Top & Side Air Ports - 3/8" NPTF
	Sealed Service Chamber / No Clamp Band

P/N Series	1412	1416	1420	1427	1430	1436
Model	C12	C16	C20	C24L	C30	C36
Size	12	16	20	24	30	36
Stroke	1.75" (44.5 mm)	2.25" (57.2 mm)	2.25" (57.2 mm)	2.50" (63.5 mm)	2.50" (63.5 mm)	3.00" (76.2 mm)
P/N SAE	1412001	1416001	1420001	1427001	1430001	1436001
P/N Combination 12" Rod*	N/A	N/A	N/A	1427551*	1430551*	N/A
P/N Combination 18" Rod*	N/A	N/A	N/A	N/A	1430651*	N/A
P/N Neoprene Diaphragm	N/A	N/A	1420801	1427801	1430801	1436801
P/N Welded Yoke (2.25")	N/A	N/A	N/A	1427901	1430901	N/A
P/N METRIC	N/A	N/A	1420202	1427202	1430202	1436202
Wt. lb (kg)	3.80 lb (1.7 kg)	5.90 lb (2.7 kg)	8.02 lb (3.6 kg)	9.00 lb (4.1 kg)	10.70 lb (4.9 kg)	15.88 lb (7.2 kg)
A	3.84" (97.5 mm)	4.43" (112.5 mm)	4.16" (105.7 mm)	4.42" (112.3 mm)	4.43" (112.5 mm)	5.12" (130.0 mm)
B	3.13" (79.5 mm)	3.64" (161.0 mm)	3.41" (86.6 mm)	3.67" (93.2 mm)	3.69" (93.7 mm)	4.52" (114.8 mm)
C	5.69" (144.5 mm)	6.66" (169.0 mm)	6.92" (175.8 mm)	7.46" (189.5 mm)	8.27" (210.0 mm)	9.44" (240.0 mm)
D	3.00" (76.2 mm)	3.00" (76.2 mm)	4.75" (120.7 mm)	4.75" (120.7 mm)	4.75" (120.7 mm)	4.75" (120.7 mm)
E	7/16" - 14 UNC		5/8" - 11 UNC (M16 x 1.5 - 6g)			
F	1/2" - 20 UNF		5/8" - 18 UNF (M16 x 1.5 - 6g)			
Inlets	3/8" - 18 NPTF		3/8" - 18 NPTF (M16 x 1.5 - 6H)			
X - Min.	4.00" (101.6 mm)		8.00" (203.2 mm)			

* For Transit, Hendrickson Intraax/Vantraax Suspension applications. P/N's ending in XXXX651 have 3/4" push-rod.

NOTE: Product information and specifications subject to change without notice. Refer to the MGM Brakes website for latest updated information.

Replacement Parts

	P/N Series	1412	1416	1420	1427	1430	1436
	Model	C12	C16	C20	C24L	C30	C36
1	Kit - NP Chamber (b)	9015207	9015136	9015046	N/A	9015050	9015049
2	Kit - Nuts & Bolts	9003002	9003001	9003001	9003001	9003001	9003001
3	Clamp Band Assembly	8216012	8216018	8216020	8216025	N/A	8216036
4	Diaphragm	8017112	8017116	8017120	8017141	8017730	8017836
5	Kit - Push-Rod Assembly (b) SAE	9064018	9064019	9064001	9064002	9064003	9064004
5a	Kit - Push-Rod Assembly (b) METRIC	N/A	N/A	9064015	9064016	9064035	9064009
6	Return Spring	8068007	8068008	8068002	8068002	8068002	8068012
7	Kit - Center Hole Shield	N/A	N/A	9065002	9065002	9065002	9065002
8	NP Chamber Assembly (b)	8215142	8215023	8215169	N/A	8215501	8215036
9	Kit - Nuts & Washers SAE	9002003	9002003	9002001	9002001	9002001	9002001
9a	Kit - Nuts & Washers METRIC	N/A	N/A	9002002	9002002	9002002	9002002
10	Hex Nut - Yoke SAE	8130011	8130011	8130004	8130004	8130004	8130004
10a	Hex Nut - Yoke METRIC	N/A	N/A	8130016	8130016	8130016	8130016
11	Pressure Cap (2-inlets/steel)	8010066(a)	8210013	8210010	8210002	8210003	8010009
OPTIONAL ITEMS - For additional replacement parts, refer to Section 9							
Yoke Assembly		For additional replacement parts, refer to Section 9					
Boot & Retainer		For additional replacement parts, refer to Section 9					

NOTE: (a) Type 12 pressure cap is cast aluminum.
(b) To ensure correct stroke alert positioning, these kits must be used only on the designated MGM Brake units.

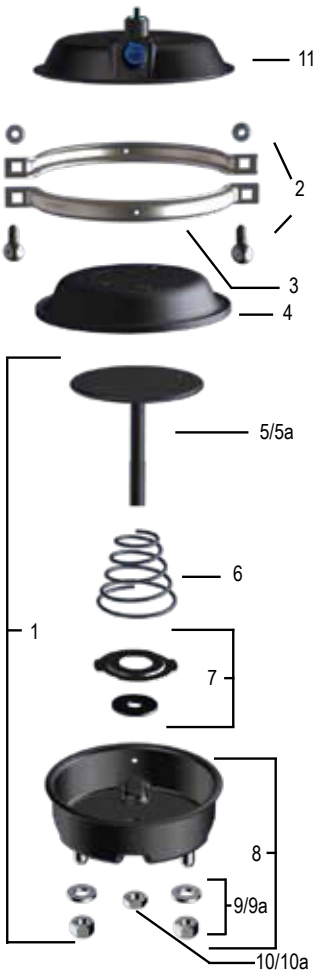

Center Hole Shield

Allows for visual inspection of stroke alert while preventing entry of contaminants.

Welded Yoke Chamber

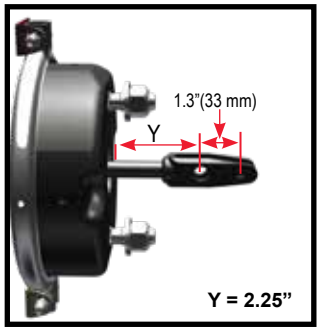

For more welded yoke choices, see page 104-105

NOTE: Product information and specifications subject to change without notice. Refer to the MGM Brakes website for latest updated information.

Long Stroke Models

CL

VMRS# 013-004-027

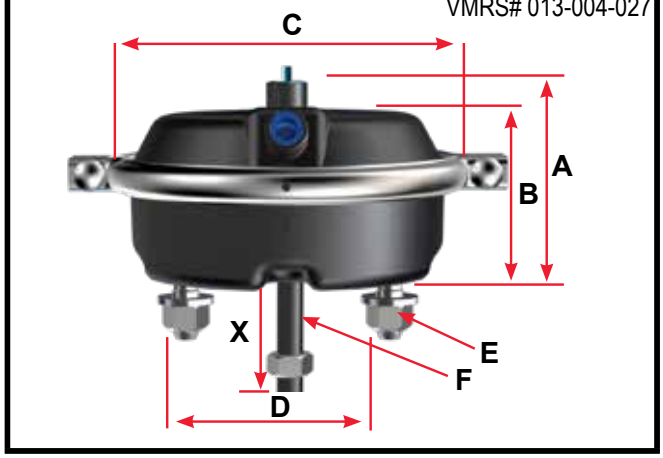

C Model Features

✓	Epoxy Coated Formed Steel Pressure Cap & Non-Pressure Housing
✓	Heavy-Duty Reinforced Diaphragms (Oil Resistant Options Available)
✓	Epoxy Coated External Piston Rod w/Stroke Alert and Stone Shield
✓	Top & Side Air Ports - 3/8" NPTF
	Sealed Service Chamber / No Clamp Band

P/N Series	1418	1421	1428	1431
Model	C16L2.5	C20L	C24L3	C30L3
Size	16	20	24	30
Stroke	2.50" (63.5 mm)	2.50" (63.5 mm)	3.00" (76.2 mm)	3.00" (76.2 mm)
P/N SAE	1418001	1421001	1428001	1431001
P/N Neoprene Diaphragm	N/A	N/A	1428801	1431801
P/N Welded Yoke (2.25")	N/A	N/A	1428901	1431901
P/N METRIC	N/A	1421202	1428202	1431202
Wt. lb (kg)	6.42 lb (2.9 kg)	6.81 lb (3.1 kg)	9.72 lb (4.4 kg)	10.76 lb (4.9 kg)
A	4.60" (117.0 mm)	4.44" (112.8 mm)	5.30" (134.6 mm)	5.31" (134.9 mm)
B	3.87" (93.0 mm)	3.71" (94.3mm)	4.22" (107.0 mm)	4.36" (111.0 mm)
C	6.66" (169.0 mm)	6.85" (174.0 mm)	7.37" (187.2 mm)	8.24" (209.3 mm)
D	3.00" (76.2 mm)	4.75" (120.7 mm)	4.75" (120.7 mm)	4.75" (120.7 mm)
E	7/16" - 14 UNC	5/8" - 11 UNC (M16 x 1.5 - 6g)		
F	1/2" - 20 UNF	5/8" - 18 UNF (M16 x 1.5 - 6g)		
Inlets	3/8" - NPTF	3/8" - 18 NPTF (M16 x 1.5 - 6H)		
X - Min.	4.00" (101.6 mm)	8.00" (203.2 mm)		

NOTE: Product information and specifications subject to change without notice. Refer to the MGM Brakes website for latest updated information.

Replacement Parts					
P/N Series		1418	1421	1428	1431
Model		C16L2.5	C20L	C24L3	C30L3
1	Kit - NP Chamber (a)	9015205	9015233	9015200	9015201
2	Kit - Nuts & Bolts	9003001	9003001	9003001	9003001
3	Clamp Band Assembly	8216018	8216020	8216025	8216045
4	Diaphragm	8017216	8017220	8017924	8017830
5	Kit - Push-Rod Assembly (a) SAE	9064022	9064020	9064006	9064008
5a	Kit - Push-Rod Assembly (a) METRIC	N/A	9064015	9064027	9064028
6	Return Spring	8068008	8068002	8068012	8068012
7	Kit - Center Hole Shield	N/A	9065002	9065002	9065002
8	NP Chamber Assembly (a)	8215023	8215169	8215200	8215501
9	Kit - Nuts & Washers SAE	9002003	9002001	9002001	9002001
9a	Kit - Nuts & Washers METRIC	N/A	9002002	9002002	9002002
10	Hex Nut - Yoke SAE	8130011	8130004	8130004	8130004
10a	Hex Nut - Yoke METRIC	N/A	8130016	8130016	8130016
11	Pressure Cap (2-inlet/steel)	8210020	8210022	8210026	8210024
OPTIONAL ITEMS - For additional replacement parts, refer to Section 9					
Yoke Assembly		For additional replacement parts, refer to Section 9			
Boot & Retainer		For additional replacement parts, refer to Section 9			

NOTE: (a) To ensure correct stroke alert positioning, these kits must be used only on the designated MGM Brake units.

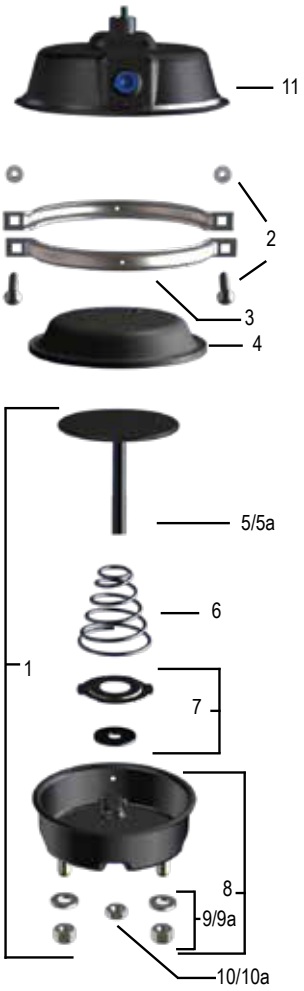

Welded Yoke Chamber

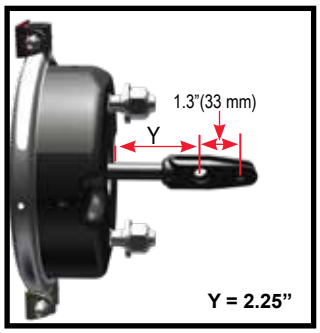

For more welded yoke choices, see page 104-105

NOTE: Product information and specifications subject to change without notice. Refer to the MGM Brakes website for latest updated information.

Long Stroke Models

CS

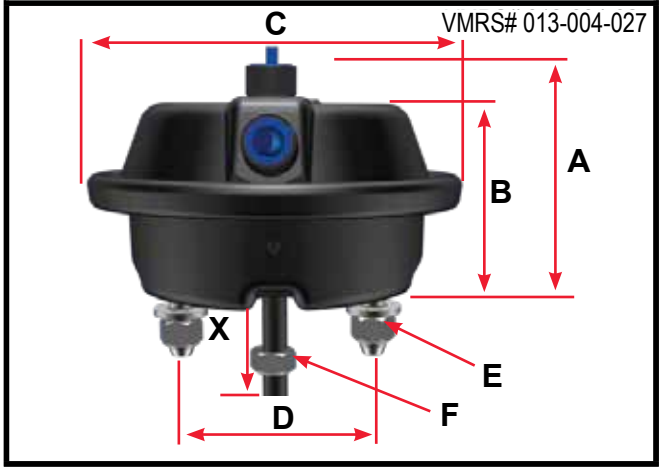

CS Model Features

✓	Epoxy Coated Formed Steel Pressure Cap & Non-Pressure Housing
✓	Heavy-Duty Reinforced Diaphragms (Oil Resistant Options Available)
✓	Epoxy Coated External Piston Rod w/Stroke Alert and Stone Shield
✓	Top & Side Air Ports - 3/8" NPTF
✓	Sealed Service Chamber / No Clamp Band

P/N Series	1617	1621	1623	1627
Model	CS16LH	CS20L	CS20L3	CS24L
Size	16	20	20	24
Stroke	2.50" (63.5 mm)	2.50" (63.5 mm)	3.00" (76.2 mm)	2.50" (63.5 mm)
P/N SAE	1617001	1621001	1623001	1627001
P/N Neoprene Diaphragm	N/A	N/A	N/A	N/A
P/N Welded Yoke (2.25")	1617901	1621901	N/A	N/A
P/N METRIC	1617002	1621002	1623002	1627202
Wt. lb (kg)	6.62 lb (3.0 kg)	6.80 lb (3.1 kg)	8.78 lb (4.0 kg)	8.40 lb (3.8 kg)
A	4.37" (111.0 mm)	4.37" (111.0 mm)	5.14" (130.6 mm)	4.37" (111.0 mm)
B	3.65" (93.0 mm)	3.74" (95.3 mm)	4.41" (112.0 mm)	3.63" (92.3 mm)
C	7.00" (177.8 mm)	7.00" (177.8 mm)	7.02" (178.3 mm)	7.31" (185.7 mm)
D	4.75" (120.7 mm)	4.75" (120.7 mm)	4.75" (120.7 mm)	4.75" (120.7mm)
E	5/8" - 11 UNC (M16 x 1.5 - 6g)			
F	5/8" - 18 UNF (M16 x 1.5 - 6g)			
Inlets	3/8" - 18 NPTF (M16 x 1.5 - 6H)			
X - Min.	8.00" (203.2 mm)			

P/N Series	1628	1630	1631	1640
Model	CS24L3	CS30	CS30L3	CS24LW
Size	24	30	30	24
Stroke	3.00" (76.2 mm)	2.50" (63.5 mm)	3.00" (76.2 mm)	2.50" (63.5 mm)
P/N SAE	1628001	1630001	1631001	1640001
P/N Neoprene Diaphragm	N/A	N/A	1631801	N/A
P/N Welded Yoke (2.25")	1628901	1630901	1631901	N/A
P/N METRIC	N/A	1630202	1631202	1640202
Wt. lb (kg)	9.10 lb (4.1 kg)	10.12 lb (4.6 kg)	10.55 lb (4.8 kg)	8.66 lb (3.9 kg)
A	5.30" (134.6 mm)	4.39" (111.5 m)	5.31" (134.9 mm)	4.37" (111.0 mm)
B	4.16" (105.6 mm)	3.67" (93.2 mm)	4.17" (106.0 mm)	3.63" (92.3 mm)
C	7.31" (185.7 mm)	8.18" (207.8 mm)	8.18" (207.8 mm)	7.31" (185.7 mm)
D	4.75" (120.7 mm)	4.75" (120.7 mm)	4.75" (120.7 mm)	4.75" (120.7mm)
E	5/8" - 11 UNC (M16 x 1.5 - 6g)			
F	5/8" - 18 UNF (M16 x 1.5 - 6g)			
Inlets	3/8" - 18 NPTF (M16 x 1.5 - 6H)			
X - Min.	8.00" (203.2 mm)			

NOTE: Product information and specifications subject to change without notice. Refer to the MGM Brakes website for latest updated information.

Long Stroke Models

Replacement Parts

P/N Series		1617	1621	1623	1627	1628	1630	1631	1640
Model		CS16LH	CS20L	CS20L3	CS24L	CS24L3	CS30	CS30L3	CS24LW
1	Kit - NP Chamber (a)	N/A	N/A	N/A	N/A	N/A	N/A	N/A	N/A
2	Kit - Nuts & Bolts	N/A	N/A	N/A	N/A	N/A	N/A	N/A	N/A
3	Clamp Band Assembly	N/A	N/A	N/A	N/A	N/A	N/A	N/A	N/A
4	Diaphragm	N/A	N/A	N/A	N/A	N/A	N/A	N/A	N/A
5	Kit - Push-Rod Assembly (a) SAE	N/A	N/A	N/A	N/A	N/A	N/A	N/A	N/A
5a	Kit - Push-Rod Assembly (a) METRIC	N/A	N/A	N/A	N/A	N/A	N/A	N/A	N/A
6	Return Spring	N/A	N/A	N/A	N/A	N/A	N/A	N/A	N/A
7	Kit - Center Hole Shield	N/A	N/A	N/A	N/A	N/A	N/A	N/A	N/A
8	NP Chamber Assembly (a)	N/A	N/A	N/A	N/A	N/A	N/A	N/A	N/A
9	Kit - Nuts & Washers SAE	9002001	9002001	9002001	9002001	9002001	9002001	9002001	9002001
9a	Kit - Nuts & Washers METRIC	9002002	9002002	9002002	9002002	9002002	9002002	9002002	9002002
10	Hex Nut - Yoke SAE	8130004	8130004	8130004	8130004	8130004	8130004	8130004	8130004
10a	Hex Nut - Yoke METRIC	8130016	8130016	8130016	8130016	8130016	8130016	8130016	8130016
11	Pressure Cap (2-inlet/steel)	N/A	N/A	N/A	N/A	N/A	N/A	N/A	N/A
OPTIONAL ITEMS - For additional replacement parts, refer to Section 9									
Yoke Assembly		For additional replacement parts, refer to Section 9							
Boot & Retainer		For additional replacement parts, refer to Section 9							

NOTE: All CS models are sealed assemblies, non-serviceable, therefore replacement kits are not available.

Welded Yoke Chamber

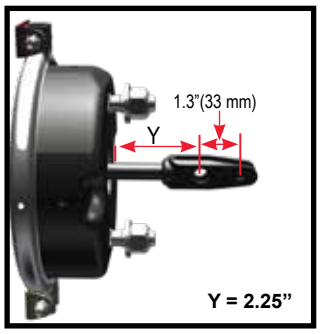

For more welded yoke choices, see page 104-105

NOTE: Product information and specifications subject to change without notice. Refer to the MGM Brakes website for latest updated information.

WEDGE BRAKES

New Design, Better Performance, Same Reliability and Quality

MGM BRAKES Worldwide

Page(s)

Section 2: Wedge Spring Brakes..... 76-83

Standard Stroke Models

CW	Service Chambers, Wedge	78-79
MJW1216	Magnum Performance Plus, Wedge	80-81
MJW1616	Magnum Performance Plus, Wedge	80-81
MJW1624	Magnum Performance Plus, Wedge	82-83

The US Military has relied heavily on MGM Wedge brakes for their MRAP and MATV vehicles. They are desirable for this application because there is no exposed brake linkage. Two brake actuators can be mounted per wheel end to meet the high force outputs needed to stop today's up-armored vehicles. Packaging is quite compact. Wedge brakes can be mounted on the wheel ends of fully articulated axles. Water tight snorkeled versions are available to meet military fording requirements.

We offer type 9, 12 & 16 service chambers in vented and snorkeled versions. Aluminum pressure caps are available for the type 9 and type 12 service chambers. These reduce vehicle weight by about ½ lb. per actuator vs. a steel cap.

We offer type 1216, 1616, and 1624 wedge parking brakes. These feature "Magnum" piston type brakes which are well suited to demanding parking and vehicle holding situations. When hauling maximum payloads through mountainous terrain or when quick release at low pressure is important, a "Magnum" is your best choice. These brakes deliver much higher force output per unit volume than a comparable double diaphragm brake. These also feature the MGM patented dual-thread release bolt design, allowing the MJW Model to fit into tight areas where other spring brakes can't due to protrusion of the release bolt.

Wedge brakes come in a number of different tube lengths. They also have two rod styles, Meritor (with a red guide) and Bendix. Brakes can be custom configured for OEMs.

The MJW1624BT156 is a brake that was specially designed for a bus application. It has a unique rod insertion depth that should not be used in a standard application.

CW

MJW

MJW

NOTE: Product information and specifications subject to change without notice. Refer to the MGM Brakes website for latest updated information.

CW (shown with single port)

VMRS# 013-010-034

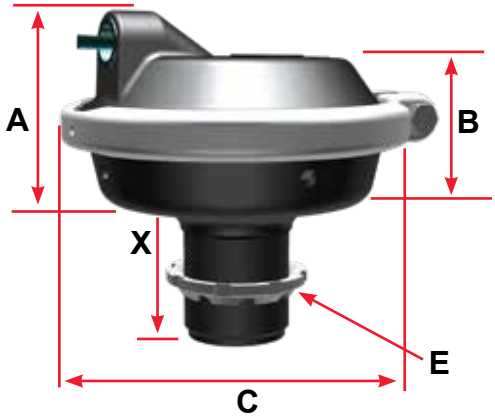

NOTE: X - Dimension of mounting tube is measured from bottom flat on non-pressure chamber to tube end.

CW Model Features

✔	Formed Steel Non-Pressure Chamber - Epoxy Coated
✔	Heavy-Duty Nylon Reinforced Diaphragms
✔	Top and Side Air Ports - 3/8" NPTF

Wedge Piston Assembly
Meritor Bendix

Ordering: Determine if foundation brake is Meritor or Bendix type by comparison to piston assembly photos above.

P/N Series	1009	1012	1016
Model	CW9	CW12	CW16
Size	9	12	16
Stroke	1.75" (44.5 mm)	1.75" (44.5 mm)	1.75" (44.5 mm)
Wt. (lb/kg)*	3.53 lb (1.6 kg)	3.81 lb (1.7 kg)	4.90 lb. (2.2 kg)
A	2.97" (75.4 mm)	3.10" (78.7 mm)	2.85" (72.4 mm)
B	2.42" (61.5 mm)	2.39" (60.7 mm)	2.62" (66.5 mm)
C	5.25" (133.4 mm)	5.69" (144.5 mm)	6.59" (167.4 mm)
E	1 3/4" - 12 UN-2A	1 3/4" - 12 UN-2A	1 3/4" - 12 UN-2A
Inlets	3/8" - 18 NPTF	3/8" - 18 NPTF	3/8" - 18 NPTF

NOTE: * Weight will vary in relation to tube length.

CW Service Brake Chamber						
Size	Type 9		Type 12		Type 16	
Stroke	1.75" (44.5 mm)		1.75" (44.5 mm)		1.75" (44.5 mm)	
"X" DIM	Meritor	Bendix	Meritor	Bendix	Meritor	Bendix
2.25" (57.2 mm)	1009018	1009012	1012008	1012009	1016004	1016001
2.85" (72.4 mm)	*	1009020	1012001	1012004	1016003	1016005
3.75" (95.3 mm)	*	*	*	1012097	*	1016019
4.10" (104.1 mm)	1009032	1009021	1012002	1012048	1016006	*
4.56" (115.8 mm)	*	*	1012066	*	*	*
6.10" (154.9 mm)	1009053	1009022	1012057	1012049	1016017	*
7.56" (192.0 mm)	*	*	1012058	*	*	*
8.75" (222.3 mm)	1009049	*	1012007	*	*	*
10.19" (258.8 mm)	*	*	1012003	1012006	1016020	*
12.00" (304.8 mm)	*	*	1012096	*	1016011	*
14.00" (355.6mm)	*	*	1012056	1012052	*	*

NOTE: (*) This chamber version is not available.

NOTE: Product information and specifications subject to change without notice. Refer to the MGM Brakes website for latest updated information.

CW Chamber Service Kits						
Size	Type 9		Type 12		Type 16	
Stroke	1.75" (44.5 mm)		1.75" (44.5 mm)		1.75" (44.5 mm)	
"X" DIM	Meritor	Bendix	Meritor	Bendix	Meritor	Bendix
2.25" (57.2 mm)	9015040	9015001	9015003	9015002	9015042	9015041
2.85" (72.4 mm)	9015005	9015004	9015007	9015006	9015044	9015043
3.75" (95.3 mm)	*	*	*	9015134	*	9015095
4.10" (104.1 mm)	9015009	9015008	9015011	9015010	9015059	*
4.56" (115.8 mm)	*	*	9015013	*	*	*
6.10" (154.9 mm)	*	*	9015019	9015018	9015096	*
7.56" (192.0 mm)	*	*	9015045	*	*	*
8.75" (222.3 mm)	*	*	9015022	*	*	*
10.19" (258.8 mm)	*	*	9015026	9015025	9015140	*
12.00" (304.8 mm)	*	*	9015102	*	9015094	*
14.00" (355.6mm)	*	*	9015031	9015030	*	*

NOTE: (*) This version is not available.

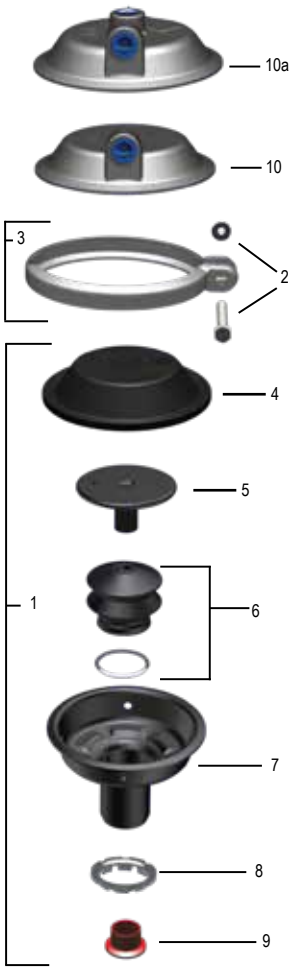

Replacement Parts				
P/N Series		1009	1012	1016
Model		CW9	CW12	CW16
1	Kit - NP Chamber	Refer to wedge chamber service kits above		
2	Kit - Nuts & Bolts	9003002	9003002	9003001
3	Clamp Band Assembly	8216009	8216012	8216018
4	Diaphragm	(a)	(a)	(a)
5	Kit - Push-Rod Assembly	(a)	(a)	(a)
6	Kit- Wedge Boot	9004005	9004005	9004005
7	NP Chamber Assembly	(a)	(a)	(a)
8	Spanner Nut	8034007	8034007	8034007
9	Wedge Guide - Meritor	8024006	8024006	8024006
10	Pressure Cap (1 Inlet)	N/A	8010040	8210001
10a	Pressure Cap (2 Inlets)	8010028	8010066	8210013

NOTE: (a) Diaphragm is glued to push-rod plate, therefore diaphragm and push-rod assembly are available only as part of item 1 kit.

• For additional replacement parts, refer to Section 9.

NOTE: Product information and specifications subject to change without notice. Refer to the MGM Brakes website for latest updated information.

1.75” (44.5 mm) Stroke Model

Combination	Piggyback Plus Kit
VMRS# 013-010-034 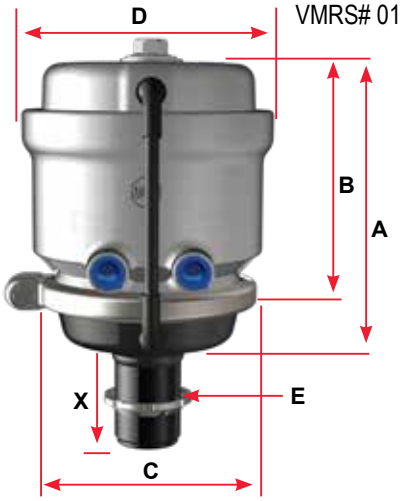	N/A

MJW Model Features

✓	Lightweight, Rugged Aluminum Housing	✓	Polymer Push-Rod Guide
✓	Epoxy Coated Power Spring	✓	Molded Nitrile Rubber Push-Rod Air Seal
✓	External Breather Tube	✓	Low Friction Piston and Guide
✓	Integral Release Bolt	✓	Heavy-Duty Nylon Reinforced Diaphragm

P/N Series	MJW1216AT	MJW1616AT
Model	MJW1216AT	MJW1616AT
Size	1216	1616
Stroke	1.75” (44.5 mm)	1.75” (44.5 mm)
Push-Rod	Meritor / Bendix	Meritor / Bendix
P/N Combination SAE	(a)	(a)
P/N Piggyback Plus Kit SAE	N/A	N/A
P/N Combination METRIC	***	***
Wt.Combination	12.50 lb (5.7 kg)*	12.16 lb (5.5 kg)*
Wt. Single	N/A	N/A
A	7.89” (200.4 mm)	7.15” (181.6 mm)
B	5.83” (148.1 mm)	5.98” (151.9 mm)
C	5.70” (144.8 mm)	6.59” (167.4 mm)
D	6.44” (163.6 mm)	6.47” (164.2 mm)
E	1 3/4” - 12 UNC	1 3/4” - 12 UNC
Inlets	3/8” - 18 NPTF	3/8” - 18 NPTF
X (a)	SEE CHART	SEE CHART

Standard Assembly Part Numbers		
Model	MJW1216AT	
Size	MJW1216	
X Dimension	Meritor	Bendix
2.25” (57.2 mm)	MJW1216AT052	MJW1216AT059
2.85” (72.4mm)	MJW1216AT053	MJW1216AT060
4.10” (104.1 mm)	MJW1216AT054	MJW1216AT061
6.10” (154.9 mm)	MJW1216AT055	MJW1216AT062
Model	MJW1616AT	
Size	MJW1616	
X Dimension	Meritor	Bendix
2.25” (57.2 mm)	N/A	N/A
2.85” (72.4mm)	MJW1616AT051	MJW1616AT056
4.10” (104.1 mm)	N/A	N/A
6.10” (154.9 mm)	N/A	N/A

NOTE: (a) Refer to “Standard Assembly Part Numbers Chart” for mounting tube length variations.

NOTE: (*) Unit weighed with 5” (127.0 mm) tube (x dimension). Weight will vary in relation to tube length.

NOTE: (***) For information on availability, contact MGM Brakes Customer Service, 1-800-527-1534 (U.S. and Canada), or for International email: mail@mgmbrakes.com.

NOTE: Product information and specifications subject to change without notice. Refer to the MGM Brakes website for latest updated information.

Replacement Parts			
	P/N Series	MJW1216AT	MJW1616AT
	Model	MJW1216AT	MJW1616AT
	Part Description	MGM P/N	MGM P/N
1	Kit - Breather Tube	9081001	***
2	Kit - Nuts & Bolts	9003002	9003001
3	Clamp Band Assembly	8216012	8216018
4	Diaphragm	(a)	(a)
5	Push Rod	(a)	(a)
6	Kit - Wedge Boot	9004005	9004005
7	Spanner Nut	8034007	8034007
8	Wedge Guide (Meritor)	8024006	8024006
9	Kit - NP Chamber	Refer to Wedge Chamber service kits below (a)	***

NOTE: (a) Diaphragm is glued to push-rod plate, therefore diaphragm and push-rod assembly are available only as part of item 9 kit.
NOTE: (***) For information on availability, contact MGM Brakes Customer Service, 1-800-527-1534 (U.S. and Canada), or for International email: mail@mgmbrakes.com.
For additional replacement parts, refer to Replacement Parts Section 9.

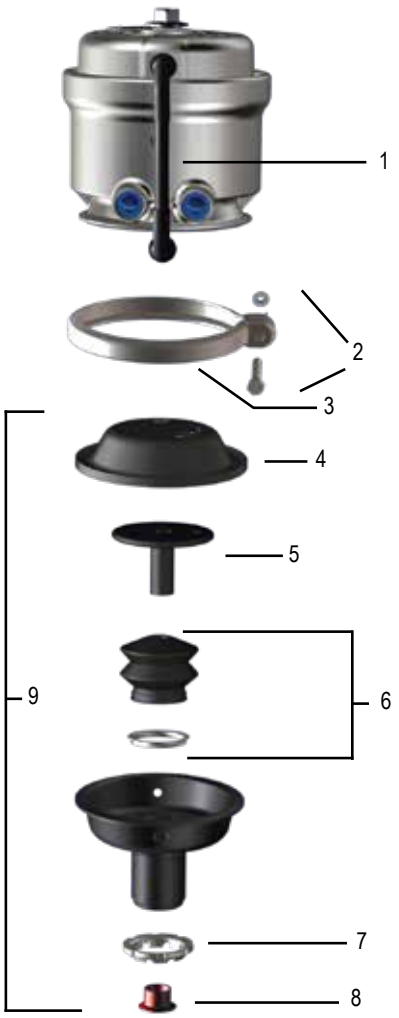

Standard Service Kits		
Type MJW1216AT		
Stroke 1.75” (44.5 mm)		
X Dimension	Meritor	Bendix
2.25” (57.2 mm)	9015247	9015254
2.85” (72.4mm)	9015248	9015255
4.10” (104.1 mm)	9015249	9015256
6.10” (154.9 mm)	9015250	9015257

Release Bolt
Patented “Dual Thread Release Bolt” design, an MGM Brakes exclusive, provides minimal bolt protrusion at maximum release. (Approx. 1.00 inch (25.4 mm) protrusion when manually released)

Wedge Piston Assembly
Meritor Bendix

Ordering: Determine if foundation brake is Meritor or Bendix type by comparison to piston assembly photos above.

NOTE: Product information and specifications subject to change without notice. Refer to the MGM Brakes website for latest updated information.

2.00” (50.8 mm) Stroke Model

MJW1624BT Model

Combination	Piggyback Plus Kit
VMRS# 013-010-034 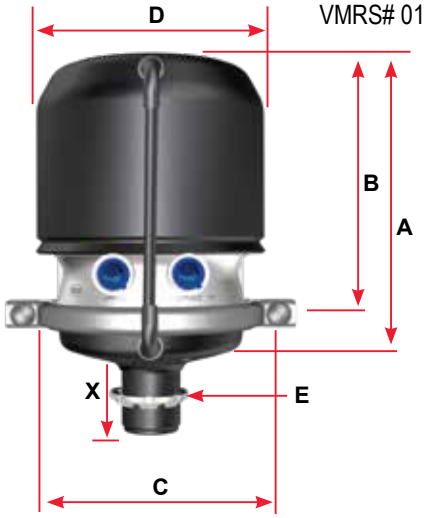	N/A

MJW Model Features

✓	Tamper Resistant Design	✓	Increased Corrosion Resistance - Steel Head and Epoxy Coated
✓	Epoxy Coated Power Spring	✓	Molded Nitrile Rubber Push-Rod Air Seal
✓	External Breather Tube	✓	Low Friction Piston and Guide
✓	Patented Integral Release Bolt	✓	Heavy-Duty Nylon Reinforced Diaphragm
✓	Lightweight	✓	Lower Hold-Off Pressure (Less Air Consumption)

P/N Series	MJW1624BT
Model	MJW1624BT
Size	1624
Stroke	2.00” (50.8 mm)
P/N Combination SAE	MJW1624BT156
P/N Piggyback Plus Kit SAE	N/A
P/N Combination METRIC	***
Wt.Combination	17.06 lb (7.7 kg)
Wt. Single	N/A
A	8.30” (210.8 mm)
B	7.16” (181.9 mm)
C	6.53” (165.9 mm)
D	6.76” (171.7 mm)
E	1 3/4” - 12 UNC
Inlets	3/8” - 18 NPTF
X	4.50” (114.3 mm)

Release Bolt
Patented “Dual Thread Release Bolt” design, an MGM Brakes exclusive, provides minimal bolt protrusion at maximum release. (Approx. 1.00 inch (25.4 mm) protrusion when manually released)

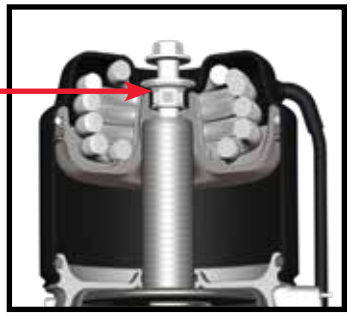

NOTE: (***) For information on availability, contact MGM Brakes Customer Service, 1-800-527-1534 (U.S. and Canada), or for International email: mail@mgmbrakes.com

CAUTION: MGM Brakes recommends this chamber be supported. The vehicle manufacturer will need to determine if a support is necessary based on the vehicle operating environment.

P/N MJW1624BT156 is for transit applications only. For other applications contact MGM Brakes Customer Service.

NOTE: Product information and specifications subject to change without notice. Refer to the MGM Brakes website for latest updated information.

Replacement Parts		
P/N Series		MJW1624BT
Model		MJW1624BT
Part Description		MGM P/N
1	Kit - Breather Tube	9081007
2	Kit - Nuts & Bolts	9003001
3	Clamp Band Assembly	8216018
4	Diaphragm	(a)
5	Push Rod	(a)
6	Kit - Wedge Boot	9004005
7	Collet Nut	8034007
8	Wedge Guide	8024006
9	Kit - NP Chamber	9015196

NOTE: (a) Diaphragm is glued to push-rod plate, therefore diaphragm and push-rod assembly are available only as part of item 9 kit.

For additional replacement parts, refer to Replacement Parts Section 9.

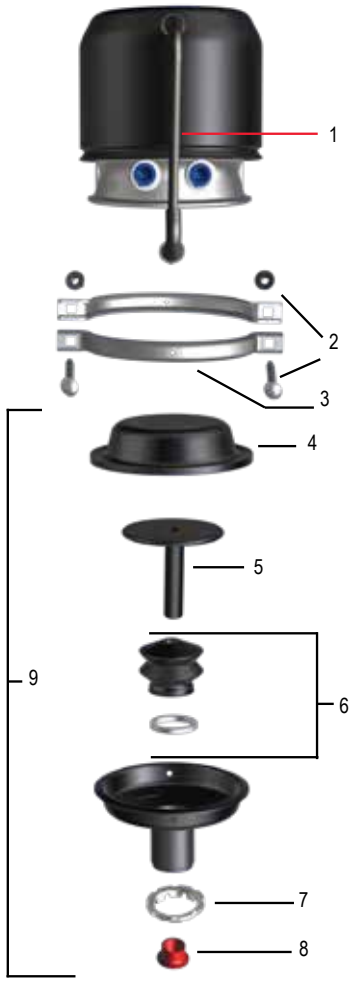

CAUTION: MGM Brakes recommends this chamber be supported. The vehicle manufacturer will need to determine if a support is necessary based on the vehicle operating environment.

P/N MJW1624BT156 is for transit applications only. For other applications contact MGM Brakes Customer Service.

NOTE: Product information and specifications subject to change without notice. Refer to the MGM Brakes website for latest updated information.

AIR DISC

Unparalleled Variety of Models
Reliable and Longer-Life
Braking Performance

American Owned
MGM BRAKES
Worldwide
Made in the U.S.A. of Domestic & Imported Parts

Page(s)

Section 3: Air Disc Brakes 84-89

Service Chambers

CSB Service Chambers, Sealed 86

Double Diaphragm

TRB Tamper Resistant, Tube 87

Piston Diaphragm

MJB Magnum, J-Series, 2.50” (63.5 mm) Stroke, Tube 88

Visual Safety Inspections of Air Disc Brakes 89

CSB

TRB

MJB

NOTE: Product information and specifications subject to change without notice. Refer to the MGM Brakes website for latest updated information.

Air Disc Model

CSB

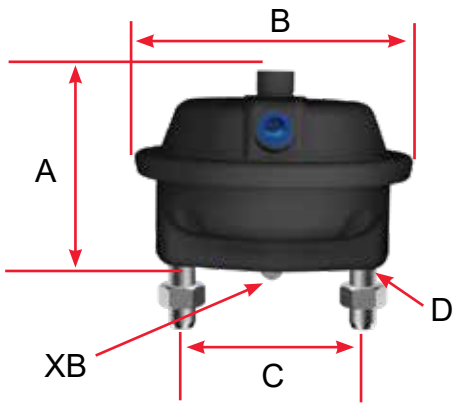

CSB Model Features

✓	Epoxy Coated Formed Steel Pressure Cap & Non-Pressure Housing
✓	Heavy-Duty Reinforced Diaphragms (Oil Resistant Options Available)
✓	Epoxy Coated or Optional Stainless Steel Piston Rod
✓	Sealed Service Chamber/No Clamp Band
✓	Top & Side Air Ports - 3/8" NPTF or M16 x 1.5
✓	Optional 3" (76.2 mm) Long Stroke w/Select Models

Model	CSB16D	CSB18D	CSB20D	CSB22D	CSB24D
Size*	16	18	20	22	24
Stroke	2.50" (63.5 mm)	2.50" (63.5 mm)	2.50" (63.5 mm)	2.50" (63.5 mm)	2.50" (63.5 mm)
Part Number SAE	CSB16D051	CSB18D051	CSB20D051	CSB22D051	CSB24D051
Part Number Metric	CSB16D049	CSB18D049	CSB20D049	CSB22D049	CSB24D049
Wt. lb. (kg)	6.5 lb (2.9 kg)	6.8 lb (3.1 kg)	7.0 lb (3.2 kg)	7.7 lb (3.5 kg)	7.9 lb (3.6 kg)
A	4.84" (122.9 mm)	4.84" (122.9 mm)	4.84" (122.9 mm)	4.86" (123.4 mm)	4.86" (123.4 mm)
B	6.99" (177.5 mm)	6.99" (177.5 mm)	6.99" (177.5 mm)	7.31" (185.7 mm)	7.31" (185.7 mm)
C	4.75" (120.7 mm)				
D	M16 x 1.5 - 6g				
Ports	3/8" -18 NPTF for SAE model (M16 x 1.5 - 6H for metric model)				
Port angle	90° from centerline of mtg. bolts				
XB	15 mm				

NOTE: All chart measurements are in both inches and metric.
* Other sizes available. Call 1-800-527-1534.

NOTE: Product information and specifications subject to change without notice. Refer to the MGM Brakes website for latest updated information.

Air Disc Model

Combination

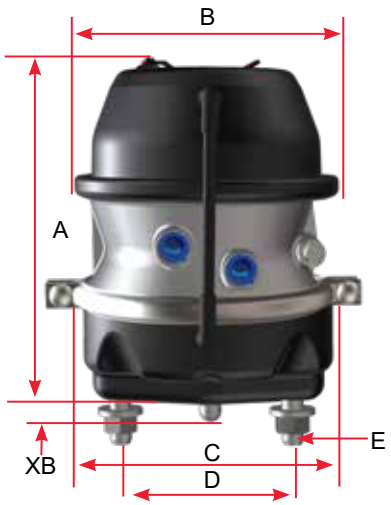

Double Diaphragm Air Disc Brake Features

✓	Tamper Resistant Parking Chamber Design
✓	Epoxy Coated Steel Parking Spring Head w/Weatherseal Plug
✓	A360 Aluminum Center Case
✓	Low Friction Internal Push-Rod w/Polymer Guide w/Nitrile Rubber Air Seal
✓	Epoxy Coated Return & Power Springs
✓	Epoxy Coated 8-Gauge Heavy-Duty Steel Non-Pressure Chamber (Type 30 Models are 6 Gauge)
✓	External Breather Tube
✓	Air Ports - 3/8" NPTF or M16 x 1.5
✓	Epoxy Coated or Optional Stainless Piston Rod
✓	Optional 3" Long Stroke w/Select Models
✓	Heavy-Duty Reinforced Diaphragms (Oil Resistant Options Available)
✓	Center Hole Diaphragms w/Type 30 Spring Side Models

Model	TRB1624DT	TRB1824DT	TRB2024DT	TRB2224DT	TRB2424DT	TRB2430DT
Size*	1624	1824	2024	2224	2424	2430
Stroke	2.50" (63.5 mm)	2.50" (63.5 mm)	2.50" (63.5 mm)	2.50" (63.5 mm)	2.50" (63.5 mm)	2.50" (63.5 mm)
Part Number SAE	TRB1624DT051	TRB1824DT051	TRB2024DT051	TRB2224DT051	TRB2424DT051	TRB2430DT051
Part Number Metric	TRB1624DT049	TRB1824DT049	TRB2024DT049	TRB2224DT049	TRB2424DT049	TRB2430DT049
Wt. lb. (kg)	15.6 lb (7.1 kg)	15.8 lb (7.02 kg)	16.0 lb (7.3 kg)	16.3 lb (7.4 kg)	16.5 lb (7.5 kg)	16.5 lb (7.5 kg)
A	8.81" (223.8 mm)	8.81" (223.8 mm)	8.81" (223.8 mm)	9.04" (229.7 mm)	9.04" (229.7 mm)	9.61" (244.1 mm)
B	7.34" (186.4 mm)	7.34" (186.4 mm)	7.34" (186.4 mm)	7.34" (186.4 mm)	7.34" (186.4 mm)	8.21" (208.5 mm)
C	6.85" (174.0 mm)	6.85" (174.0 mm)	6.85" (174.0 mm)	7.46" (189.5 mm)	7.46" (189.5 mm)	7.46" (189.5 mm)
D	4.75" (120.7 mm)					
E	M16 x 1.5 - 6g					
Ports	3/8" -18 NPTF for SAE model (M16 x 1.5 - 6H for metric model)					
Port angle	90° from centerline of mtg. bolts					
Tube angle	90° from centerline of mtg. bolts					
XB	15 mm (.591 in)					

NOTE: All chart measurements are in both inches and metric.
* Other sizes available. Call 1-800-527-1534.

NOTE: Product information and specifications subject to change without notice. Refer to the MGM Brakes website for latest updated information.

Air Disc Model

Combination

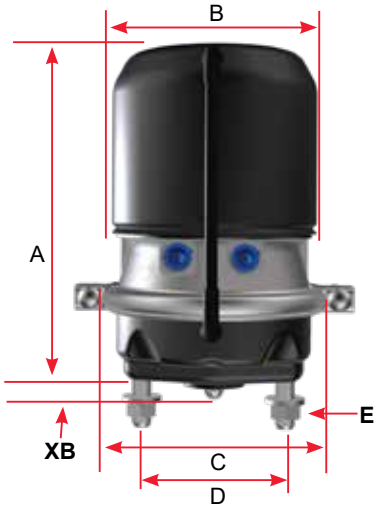

Magnum Performance Plus Model Features

✓	Tamper Resistant Parking Chamber Design
✓	Epoxy Coated Steel Power Spring Head w/Integrated Parking Spring Release Bolt
✓	A360 Aluminum Center Case
✓	Low Friction Internal Push-Rod Polymer Guide with Polymer Guide w/Nitrile Rubber Air Seal
✓	Epoxy Coated Return & Power Springs
✓	Epoxy Coated 8 Gauge Heavy-Duty Steel Non-Pressure Chamber (Type 30 Models are 6 Gauge)
✓	Epoxy Coated or Optional Stainless Piston Rod
✓	Air Ports - 3/8" NPTF or M16 x 1.5
✓	Heavy-Duty Reinforced Diaphragms (Oil Resistant Options Available)
✓	External Breather Tube
✓	Optional 3" Long Stroke w/Select Models
✓	Lighter/Compact/Low Profile Design
✓	Lower Hold-Off Pressure Reduces Air Consumption
✓	6 Year Limited Warranty

Model	MJB1624DT	MJB1824DT	MJB2024DT	MJB2224DT	MJB2424DT
Size*	1624	1824	2024	2224	2424
Stroke	2.50" (63.5 mm)	2.50" (63.5 mm)	2.50" (63.5 mm)	2.50" (63.5 mm)	2.50" (63.5 mm)
Part Number SAE	MJB1624DT051	MJB1824DT051	MJB2024DT051	MJB2224DT751	MJB2424DT751
Part Number Metric	MJB1624DT049	MJB1824DT049	MJB2024DT049	MJB2224DT049	MJB2424DT049
Wt. lb. (kg)	18.6 lb (8.5 kg)	18.8 lb (8.6 kg)	19.0 lb (8.67 kg)	19.3 lb (8.8 kg)	19.5 lb (8.9 kg)
A	9.84" (249.9 mm)	9.84" (249.9 mm)	9.84" (249.9 mm)	9.88" (250.9 mm)	9.88" (250.9 mm)
B	6.74" (171.2 mm)	6.74" (171.2 mm)	6.74" (171.2 mm)	6.74" (171.2 mm)	6.74" (171.2 mm)
C	6.87" (174.5 mm)	6.87" (174.5 mm)	6.87" (174.5 mm)	7.38" (187.5 mm)	7.38" (187.5 mm)
D	4.75" (120.7 mm)				
E	M16 x 1.5 - 6g				
Ports	3/8" -18 NPTF for SAE model (M16 x 1.5 - 6H for metric model)				
Port angle	90° from centerline of mtg. bolts				
Tube angle	90° from centerline of mtg. bolts				
XB	15 mm				

NOTE: All chart measurements are in both inches and metric.
* Other sizes available. Call 1-800-527-1534.

NOTE: Product information and specifications subject to change without notice. Refer to the MGM Brakes website for latest updated information.

Air Disc Brakes and Visual Safety Inspections

While air disc brakes offer performance and potential maintenance advantages, they are also much more difficult to visually inspect for proper operation. Air disc brakes include a brake actuator with a fully enclosed push-rod, a brake caliper with an internal adjuster mechanism, a rotor, and brake pads. This type of braking system poses unique challenges to the fleet in terms of visual brake inspections. There is no exposed push-rod in order to check actuator stroke, and the internal adjuster mechanism (designed to keep pad clearance constant like an Automatic Brake Adjuster (ABA) on s-cam systems), is fully enclosed, sealed, and not possible to visually inspect. In addition, the pads and outboard rotor face are nearly hidden from view making it difficult to check pads or rotor conditions visually, without wheel removal for subsequent detailed inspections. The industry has long known that a visual inspection of air disc brakes for proper operation is impractical, and this has been acknowledged by CVSA as a concern. Thus with air disc brakes the fleet operator does not truly know with a visual inspection any of the following:

- The brake actuator (or brake chamber) is operative
- The caliper internal adjuster is operative and maintaining pad clearance under all conditions
- The wheel end is providing full braking, partial braking, or no braking
- The brake actuator (or brake chamber) stroke is within acceptable operating limits
- The brake is lightly dragging (warning of other serious problems)

Based on this industry need, MGM Brakes has developed Electronic Brake Monitoring (e•STROKE®) for air disc brake applications. Please see Section 7 of this catalog for further information or call your local MGM Brakes sales representative who can be found by visiting our website www.MGMBRAKES.com

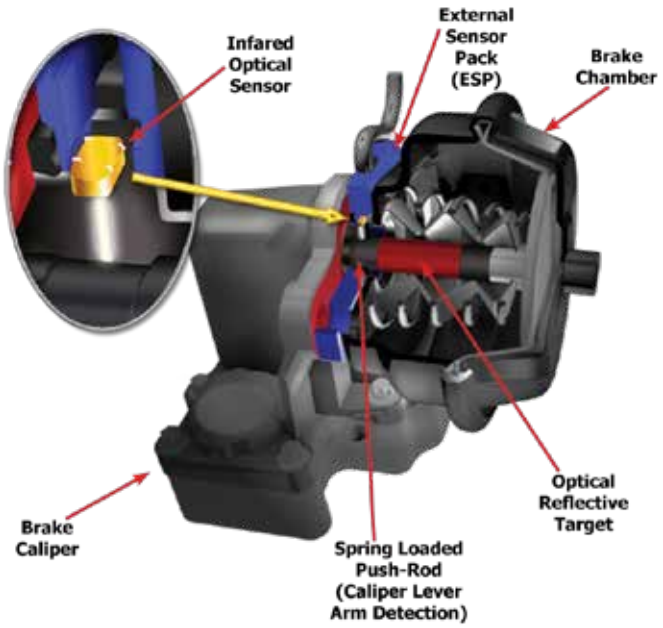

NOTE: Product information and specifications subject to change without notice. Refer to the MGM Brakes website for latest updated information.

REMOTE MOUNT CYLINDERS

Perfect For Remote Operation of Trailer Tailgates

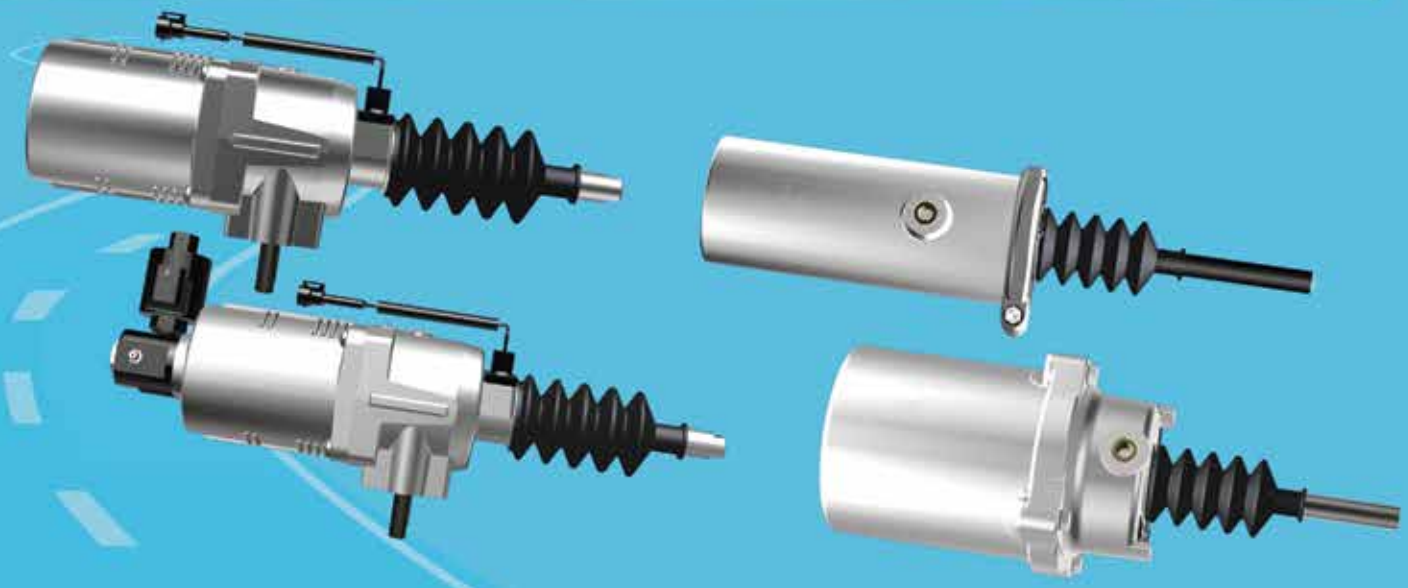

Page(s)

Section 4: Remote Mount Cylinders 90-95

R4A	Remote Cylinder	92-93
R5AHD	Remote Cylinder, Heavy-Duty	92-93
R7A (SAAR)	Remote Cylinder, Spring Applied, Air Released	94-95
R8H (SAHR)	Remote Cylinder, Spring Applied, Hydraulic Released	94-95

S

MGM Brakes R4A & R5AHD Remote Mount Cylinders are the original spring brakes invented in the rugged logging country of Northern California. These cylinders were introduced by MGM Brakes in 1956 as the world's first spring-actuated parking and emergency brake actuators for commercial vehicles. These "pull-to-actuate" cylinders were originally designed for axle-mount using various weld-on and bolt-on mounting brackets and linkage arms.

R7A (SAAR) and R8H (SAHR) drive-line brakes were developed as replacements for manually operated lever applied "drive-line" brakes. Mounted to the frame rail, the actuator utilizes a cable to apply parking force to a drum mounted brake on the drive-line axle. An optional electronic "travel" sensor provides the operator with information pertaining to the position of the piston-rod "applied" or "released" position.

Today, these high-quality cylinders have been adapted to such diverse non-automotive usage as dump truck end-gate actuators, emergency brake actuators on massive logging and commercial fishing winches and numerous other special applications.

How Remote Mount Cylinders Operate

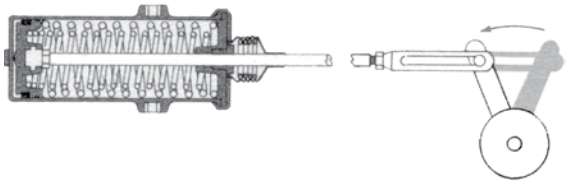

The cylinder applies a pull force when the air pressure is exhausted. This "pull" type actuation can be used to secure tailgate latches and other vehicle or equipment accessories.

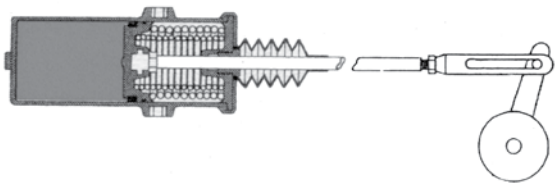

The cylinder pull force can then be released by applying air pressure which compresses the spring and extends the pistion-rod.

NOTE: Product information and specifications subject to change without notice. Refer to the MGM Brakes website for latest updated information.

Remote R4A

VMRS# 013-004-000

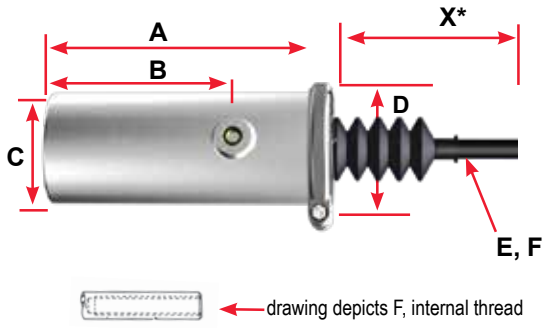

Remote R5AHD

VMRS# 013-004-000

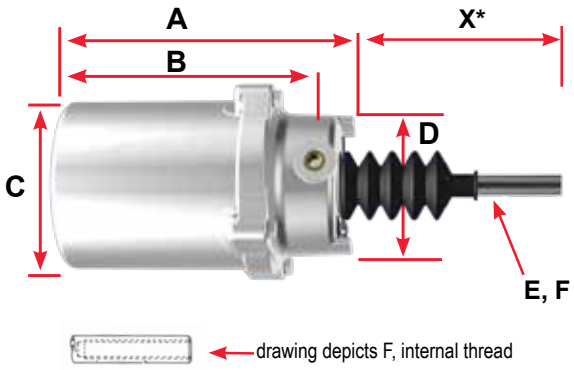

NOTE: * X-dimension (7.00", 15.00" etc.) is measured from lockpin hole in piston rod outward to rod end. Note that the lockpin hole appears from within the cylinder only after the cylinder is charged with minimum 85 psi air pressure. Boot needs to be removed to see lockpin hole.

P/N Series	5004	5005
Model	R4A	R5AHD
Size	4	5
Stroke	4.50" (114.3 mm)	4.20" (106.7 mm)
P/N External 20" (508.0 mm) Rod	5004010	N/A
P/N External 15" (381.0 mm) Rod	5004013	5005012
P/N Internal 7" (177.8 mm) Rod	5004014	5005014
Wt.Combination (lb/kg)	13.5 lb (6.1 kg)*	19.6 lb (8.9 kg)*
A	11.12" (282.4 mm)	10.50" (266.7 mm)
B	7.50" (190.5 mm)	9.38" (238.3 mm)
C	4.38" (111.3 mm)	6.12" (155.4 mm)
D	5.69" (144.5 mm)	5.12" (130.0 mm)
E (External Thread)	3/4" - 16 UNF x 10.75" (273.1 mm) long	
F (Internal Thread)	1/2" - 20 UNF x 3.00" (76.2 mm) deep	
Inlet	3/8" - NPTF	

NOTE: * Weight varies with external rod size.

Standard Assembly Part Numbers & Service Parts

Part Number	Description Of Parts
9004003	Kit - Boot & Clamp - Remote
9008001	Kit - Side Bushings R4A/R5AHD (for Trunnion Bolt Mount)

NOTE: Product information and specifications subject to change without notice. Refer to the MGM Brakes website for latest updated information.

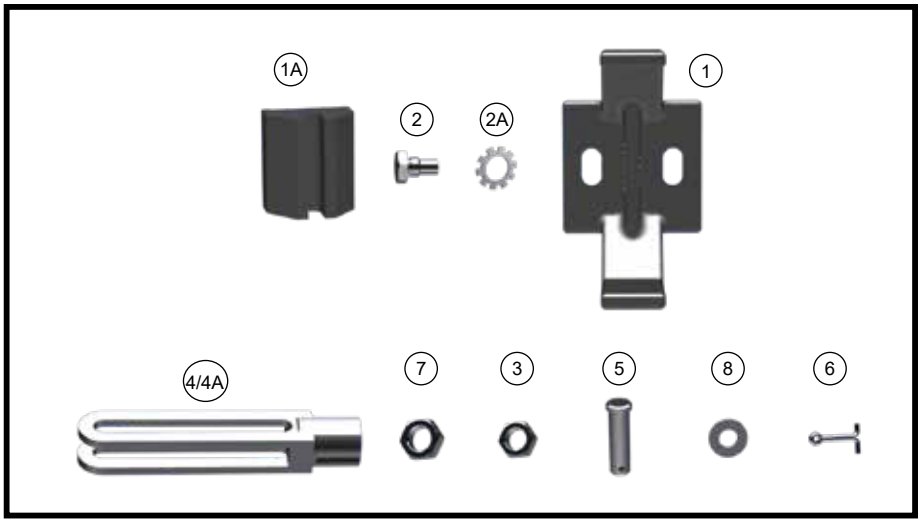

Assemblies				Kit P/N and Quantities			
Model	**P/N**	**Rod Specifications**	**Thread Length**	**9050019**	**9050027**	**9050028**	**9050035**
R4A	5004010	External Thread 20.00" (508.0 mm) Rod	3.00" (76 mm)	2			
R4A	5004013	External Thread 15.00" (381.0 mm) Rod	10.62" (269.75 mm)		1		
R4A	5004014	Internal Thread 7.00" (177.8 mm) Rod	3.00" (76 mm)				1
R5AHD	5005012	External Thread 15.00" (381.0 mm) Rod	10.75" (273.05 mm)			1	
R5AHD	5005014	Internal Thread 7.00" (177.8 mm) Rod	3.00" (76 mm)				
Key	P/N	Part Description					
1	8005001	Gimbal Bracket - R4A		2	1		1
1	8005013	Gimbal Bracket - R5AHD				1	
1A	8062001	Shock Pad - R4A		2	1		1
1A	8062002	Shock Pad - R5AHD					
2	8003003	Trunnion Bolt		4	2	2	2
2A	8141002	Star Lock Washer		4	2	2	2
3	8130011	Hex Nut 1/2"- 20 UNF					
4	8092006	Sliding Clevis 1/2"- UNF					
4A	8092010	Sliding Clevis 3/4" - UNF					
5	8038001	Yoke Pin 1/2" (12.7 mm)					
6	8151001	Cotter Pin					
7	8130002	Hex Nut 3/4"- 16 UNC		4			
8	8140002	Lockpin Washer 3/4" (19.1 mm) (inside diameter)		2			

NOTE: Product information and specifications subject to change without notice. Refer to the MGM Brakes website for latest updated information.

Remote R7A	Remote R8H
VMRS# 013-004-027 **R7A (SAAR) MODEL** SPRING APPLIED AIR RELEASE 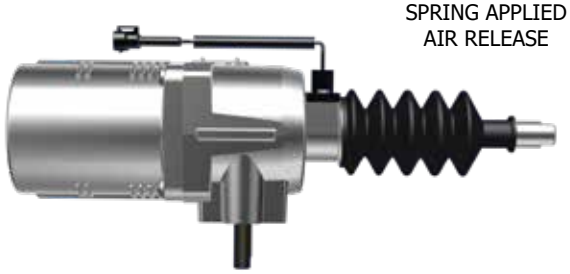	VMRS# 013-004-027 **R8H (SAHR) MODEL** SPRING APPLIED HYDRAULIC RELEASE 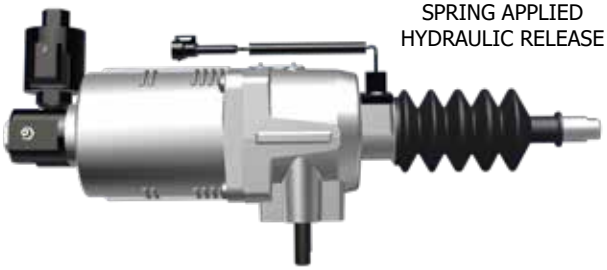

R7A (SAAR) & R8H (SAHR) Model Features

✔	Compact Design
✔	Light Weight Aluminum
✔	Electronic Stroke Sensor

Service Kits & Replacement Parts		
1	9051001	Sensor Kit - R7A (SAAR) & R8H (SAHR) with 3 pin connector
2	9041005	Cartridge - R8H (SAHR) Hydraulic Unit
3	8004002	Boot - R7A (With breather hole, for SAAR Only)
3A	8004010	Boot - R8H (SAHR)

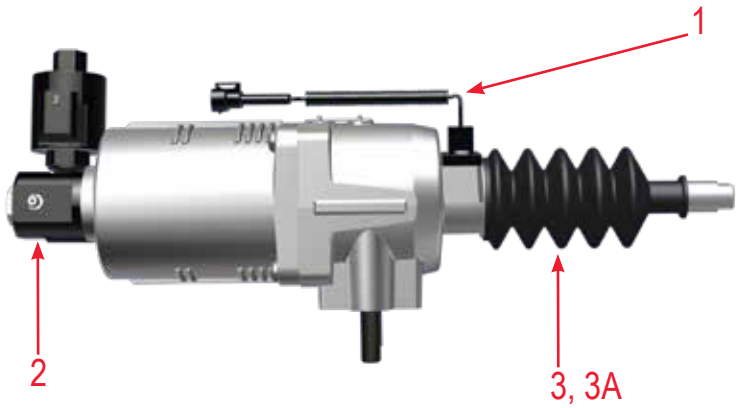

NOTE: Product information and specifications subject to change without notice. Refer to the MGM Brakes website for latest updated information.

R7A (SAAR) and R8H (SAHR) Drive-line Brakes were developed as replacements for manually operated lever applied “drive-line” brakes on class 6 and 7 vehicles. Mounted to the frame rail, the actuator utilizes a cable to apply parking force to a drum brake mounted on the drive-line axle. An optional electronic “travel” sensor provides the operator with information pertaining to the position of the piston-rod “applied” or “released” position.

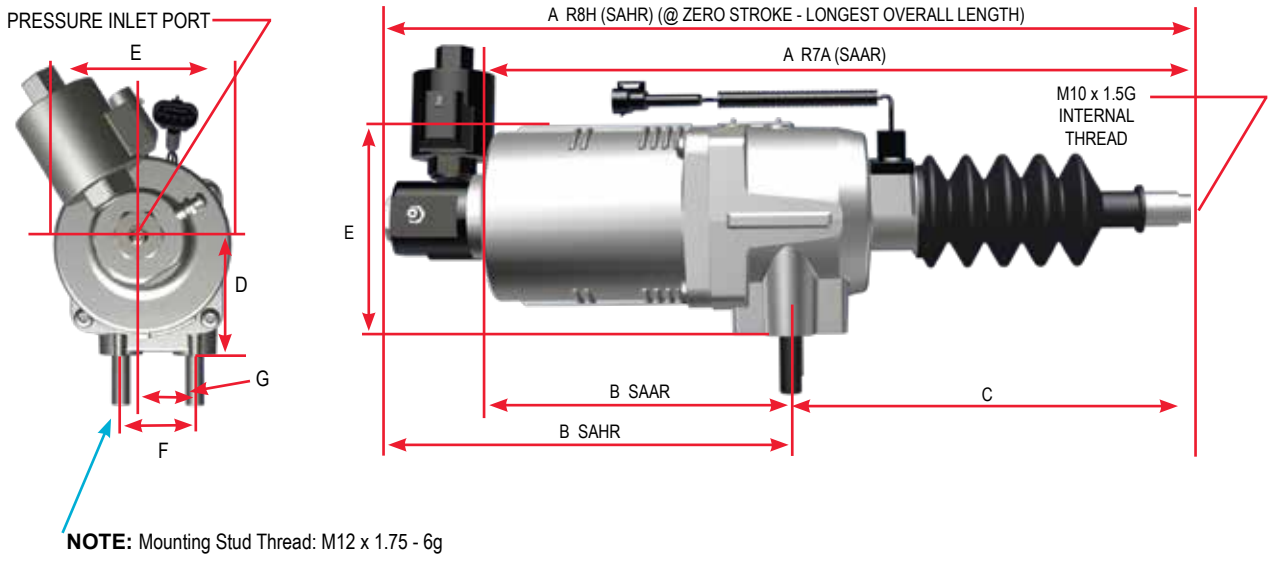

NOTE: Mounting Stud Thread: M12 x 1.75 - 6g

Model	SAAR	SAHR
Series	R7A	R8H
Part Number	5007001	5008001
Stroke of Unit	2.75” (69.8 mm)	2.75” (69.8 mm)
Medium	Air	DOT3 & DOT4 Brake Fluid
Inlet Port	3/8” NPTF	7/16-24 UNS 2B Inverted Flair Seat
Operating Pressure	130 PSI (9.0 Bar)	2320 PSI (160.0 Bar)
Temperature Range	-40ºF/+190º F (-40º C/+ 88º C)	-40º F/+190º F (-40º C/+ 88º C)
Weight – estimated	6.91 lb (3.1 kg)	8.7 lb (3.9 kg)
A	15.46” (392.7 mm)	18.05” (458.5 mm)
B	6.51” (165.4 mm)	9.10” (231.1 mm)
C	8.95” (227.3 mm)	
D	2.50” (63.5 mm)	
E	4.50” (114.3 mm)	
F	1.93” (49.0 mm)	
G	1.20” (30.5 mm)	

NOTE: Product information and specifications subject to change without notice. Refer to the MGM Brakes website for latest updated information.

VOCATIONAL APPLICATIONS

Durable, rugged built actuators designed specifically for proper replacement on all vocational fleet vehicles.

American Owned
MGM BRAKES
Worldwide
Made in the U.S.A. of Domestic & Imported Parts

Page(s)

Section 5: Vocational Application..... 96-105

Model Application Chart 98

Actuators Manufactured with Hybrid Neoprene Diaphragms 99

MGM Waste Chamber Breakdown Sheet - Hybrid Neoprene Diaphragm.....100

MGM Waste Chamber Breakdown Sheet - Natural Rubber Diaphragm 101

Welded Yoke Replacement Instruction.....102

Welded Yokes Application Guide..... 104-105

NOTE: Product information and specifications subject to change without notice. Refer to the MGM Brakes website for latest updated information.

MODEL APPLICATION CHART

MGM Brakes manufactures a wide variety of spring brakes, many designed specifically for niche applications. While all MGM models are engineered for the longest life and most reliable service, choosing the right spring brake for a particular application is crucial to ensuring maximum longevity and value.

APPLICATION																									
MGM Brakes Spring Brake Application Matrix: This matrix is intended for use as a general information guide only. If you have any questions concerning the application of any particular MGM Brakes model, contact your local MGM Brakes representative for assistance.	**TR**	**TRB (AIR DISC)**	**TR-HD**	**TR-HDW**	**TR-T**	**TR-THD**	**TR-THDW**	**TR-TS**	**TR-TSHD**	**TR-TSHDW**	**TR-LP3**	**TR-LP3HD**	**TR-LP3T**	**TR-LP3THD**	**TR-LP3THDW**	**TR-LP3TS**	**TR-LP3TSHD**	**TR-LP3TSHDW**	**LTR-T**	**LTR-L3**	**LTR-L3T**	**LTR-L3W**	**LTS**	**MJB (AIR DISC)**	**MJS**
ACIDS/LIQUID CORROSIVES		X						X	X	X						X	X	X						X	
DRY BULK CHEMICALS		X		X	X	X	X	X	X	X			X	X	X	X		X	X				X	X	X
DUMP TRUCK		X		X	X	X	X	X	X	X			X	X	X	X	X	X			X	X	X	X	X
FERTILIZER								X	X	X			X	X	X	X	X	X						X	X
FIRE & EMERGENCY		X			X	X	X	X	X	X											X	X	X	X	X
LINE HAUL	X	X		X	X						X		X						X	X	X	X	X	X	X
LIVESTOCK/POULTRY		X						X	X	X						X	X	X						X	
LOGGING		X		X	X	X	X						X	X	X								X	X	X
ON HIGHWAY	X	X	X	X	X	X	X	X	X	X	X	X	X	X	X	X	X	X	X	X	X	X	X	X	X
PETROLEUM PRODUCTS		X		X	X	X	X	X	X	X				X	X	X	X	X	X		X	X	X	X	X
READY-MIX CONCRETE		X		X	X	X	X	X	X	X			X	X	X	X	X	X			X	X	X	X	X
REFUSE		X		X	X	X	X	X	X	X			X	X	X	X	X	X					X	X	X
SALT TRUCK								X	X	X						X	X	X						X	X
SCHOOL BUS		X	X	X	X	X	X		X	X		X		X	X		X	X			X	X	X	X	X
TOXIC WASTE		X						X	X	X						X	X	X						X	X
TRANSIT		X						X	X	X						X	X	X			X	X	X	X	X

X Indicates Model

VOCATIONAL APPLICATIONS

NOTE: Product information and specifications subject to change without notice. Refer to the MGM Brakes website for latest updated information.

ACTUATORS MFG. w/HYBRID NEOPRENE DIAPHRAGMS

MGM Brakes manufactures service and spring brake chambers with Hybrid Neoprene Diaphragms for severe service applications where petroleum saturated contaminants may enter the air system and come into contact with the diaphragms. The hybrid diaphragm design, an MGM exclusive, combines the rigid strength of nitrile rubber with the oil-resistant properties of neoprene. Together, this provides a diaphragm that delivers superior strength, flexibility, and resistance to degradation due to contact with oil or other chemicals. Hybrid neoprene diaphragms are a great option when the air system is exposed to severe operating conditions.

The following is a list of MGM replacement service chambers and spring brakes that are equipped with hybrid neoprene diaphragms:

SERVICE CHAMBERS

Part #	Model	Description
1420801	C20	Service Chamber
1427801	C24L	Service Chamber
1427902	C24L	Service Chamber
1427904	C24L	Service Chamber
1428801	C24L3	Service Chamber
1428902	C24L3	Service Chamber
1430801	C30	Service Chamber
1430802	C30	Service Chamber
1430902	C30	Service Chamber
1430903	C30	Service Chamber
1430904	C30	Service Chamber

Part #	Model	Description
1431801	C30L3	Service Chamber
1431902	C30L3	Service Chamber
1431903	C30L3	Service Chamber
1436801	C36	Service Chamber
1628902	CS24L3	Service Chamber
1630902	CS30	Service Chamber
1631801	CS30L3	Service Chamber
1631902	CS30L3	Service Chamber
1631903	CS30L3	Service Chamber
1641902	CS24L3W	Service Chamber
1641904	CS24L3W	Service Chamber

PIGGYBACK PLUS KITS

Part #	Model	Description
3230808	TR3030LP3	Piggyback Plus
3232808	TR3030LP3HD	Piggyback Plus
3430808	TR3030	Piggyback Plus

Part #	Model	Description
3430808X	TR3030	Piggyback Plus
3431808	TR3030T	Piggyback Plus
3433808	TR3036	Piggyback Plus

TR STANDARD AND LONG STROKE CHAMBERS

Part #	Model
3230851	TR3030LP3
3231851	TR3030LP3T
3231953	TR3030LP3T
3231955	TR3030LP3T
3232851	TR3030LP3HD
3232952	TR3030LP3HD
3233952	TR3030LP3THD
3232953	TR3030LP3HD
3233953	TR3030LP3THD
3427851	TR2424L
3430851	TR3030
3430953	TR3030
3430954	TR3030
3430956	TR3030
3431851	TR3030T

Part #	Model
3431953	TR3030T
3431954	TR3030T
3431955	TR3030T
3431957	TR3030T
3432851	TR3036T
3432952	TR3036T
3432955	TR3036T
3433851	TR3036
3436851	TR3636T
3436952	TR3636T
3444851	TR3030THDW
3444955	TR3030THDW
3531851	TR3030TS
3531953	TR3030TS
3531954	TR3030TS

Part #	Model
3531955	TR3030TS
3532851	TR3036TS
3532953	TR3036TS
3532954	TR3036TS
3532955	TR3036TS
3533851	TR3030TSHD
3535851	TR3030LP3TS
3535952	TR3030LP3TS
3535953	TR3030LP3TS
3545953	TR3030LP3TSHDW
3545954	TR3030LP3TSHDW
3545955	TR3030LP3TSHDW
3545956	TR3030LP3TSHDW
3832062	LTR3030L3
3832062B	LTR3030L3

NOTE: If other sizes are required, contact your local sales representative for availability.

NOTE: Product information and specifications subject to change without notice. Refer to the MGM Brakes website for latest updated information.

HYBRID NEOPRENE DIAPHRAGM

Application:	Steer Axle	Front/Rear	Rear/Rear	Comments
All Mack, International, Freightliner, Sterling 2005 and older & all CCC, Autocar, Kenworth, Peterbilt, Hino, Ford, Volvo	1420001 C20 1427801 C24L 1428801 C24L3	3430851 TR3030 3431851 TR3030T 3230851 TR3030LP3 3231851 TR3030LP3T	3430851 TR3030 3431851 TR3030T 3230851 TR3030LP3 3231851 TR3030LP3T	Threaded rod chamber with neoprene diaphragm
Application:	**Steer Axle**	**Front/Rear**	**Rear/Rear**	**Comments**
2006+ Freightliner, Sterling, Western Star, International, Ford, Volvo with long stroke brake chambers (3030 and 3036)	**1421901 C20L** **1428902 C24L3** **1431902 C30L3**	**3232952 TR3030LP3HD** **3235951 TR3036L3T**	**3232952 TR3030LP3HD** **3235951 TR3036L3T**	Make sure long stroke and standard stroke are not mixed on the same axle
Application:	**Steer Axle**	**Front/Rear**	**Rear/Rear**	**Comments**
2006+ Mack Camelback suspension (All) and Hendrickson with 3030 chamber (standard stroke)	1427801 C24L **1427902 C24L** **1431902 C30L3**	**3431953 TR3030T**	**3431954 TR3030T**	Replace threaded rod steer with another threaded rod if it was OEM
Application:	**Steer Axle**	**Front/Rear**	**Rear/Rear**	**Comments**
2010+ Mack T-Ride/Primaxx air suspension TR-3030 and TR-3036	**1428901 C24L3** **1431902 C30L3**	**3431953 TR3030T** **3532954 TR3036TS** **3235951 TR3036L3T**	**3431953 TR3030T** **3532954 TR3036TS** **3235951 TR3036L3T**	One chamber for both rear axles-welded yoke
Application:	**Steer Axle**	**Front/Rear**	**Rear/Rear**	**Comments**
2005+ Mack with spring suspension using 3036 standard stroke welded yoke chambers	**1427902 C24L** **1428902 C24L3** **1431902 C30L3**	**3532954 TR3036TS** **3532954 TR3036TS**	**3532953 TR3036TS** **3532953 TR3036TS**	On steer axle, make sure to match the correct stroke
Application:	**Steer Axle**	**Front/Rear**	**Rear/Rear**	**Comments**
2006+ Mack with spring suspension with optional long stroke brake chambers	**1427902 C24L** **1428902 C24L3** **1431902 C30L3**	**3233952 TR3030LP3THD** **3235951 TR3036L3T**	**3233953 TR3030LP3THD** **3235954 TR3036L3T**	Make sure long stroke and standard stroke are not mixed on the same axle
Application:	**Steer Axle**	**Front/Rear**	**Rear/Rear**	**Comments**
2005+ Autocar and 2005-2013 Peterbilt/Kenworth with s-cam brakes	**1427904 C24L** **1430904 C30**	**3431955 TR3030T** **3532955 TR3036TS**	**3431955 TR3030T** **3532955 TR3036TS**	On Peterbilt/Kenworth up to mfg date April 2013. Double check mfg rod length if unsure
Application:	**Steer Axle**	**Rear Axle**		**Comments**
2007+ Mack with type 3636 on single axle	**1427902 C24L** **1428902 C24L3** **1431902 C30L3**	**3436951 TR3636T**		On steer axle, make sure to change the correct stroke
Application:	**Steer Axle**	**Front Rear**	**Rear/Rear**	**Comments**
2013+ Peterbilt/Kenworth type 3030 and 3036 long stroke	**1427902 C24L** **1428902 C24L3** **1431902 C30L3**	**3431953 TR3030T** **3233952 TR3030LP3THD** **3235951 TR3036L3T**	**3431953 TR3030T** **3233952 TR3030LP3THD** **3235951 TR3036L3T**	From April 2013 to present

NOTE: BOLD = Welded Yoke

FOR THOSE USING 2-PIN SLACK ADJUSTERS, PLEASE NOTE: The welded yoke chamber listed above have a measurement between the pins on the welded yoke of 1.30". If the vehicle's original manufacturer's clevis has a measurement other than 1.30", the welded yoke chamber listed cannot be used and a threaded rod chamber with a clevis utilizing the proper pin spacing recommended by the vehicle's manufacturer should be used instead.

NOTE: Product information and specifications subject to change without notice. Refer to the MGM Brakes website for latest updated information.

NATURAL RUBBER DIAPHRAGM

Application:	Steer Axle	Front/Rear	Rear/Rear	Comments
All Mack, International, Freightliner, Sterling 2005 and older & all CCC, Autocar, Kenworth, Peterbilt, Hino, Ford, Volvo	1420001 C20 1427001 C24L 1428001 C24L	3430051 TR3030 3431051 TR3030T 3230051 TR3030LP3 3231051 TR3030LP3T	3430051 TR3030 3431051 TR3030T 3230051 TR3030LP3 3231051 TR3030LP3T	
Application:	**Steer Axle**	**Front/Rear**	**Rear/Rear**	**Comments**
2006+ Freightliner, Sterling, Western Star, International, Ford, Volvo with long stroke brake chambers (3030 and 3036)	1421001 C20L 1428001 C24L3 **1428901 C24L3**	**3230951 TR3030LP3** **3232951 TR3030LP3HD** **3235951 TR3036L3T**	**3230951 TR3030LP3** **3232951 TR3030LP3HD** **3235951 TR3036L3T**	Heavy duty power spring New 3036 long stroke
Application:	**Steer Axle**	**Front/Rear**	**Rear/Rear**	**Comments**
2006+ Mack spring suspension (All) and Hendrickson with 3030 chamber (standard stroke)	1427001 C24L **1427901 C24L** 1428001 C24L3 **1428901 C24L3**	**3431951 TR3030T**	**3431952 TR3030T**	Replace threaded rod steer with another threaded rod if it was OEM
Application:	**Steer Axle**	**Front/Rear**	**Rear/Rear**	**Comments**
2005-2006 Mack with Henrickson suspension using 3036 chambers on rear (threaded rod only)	1427001 C24L **1427901 C24L** 1428001 C24L3 **1428901 C24L3**	3433051 TR3036 3234051 TR3036L3	3433051 TR3036 3234051 TR3036L3	Do not replace 3036 with 3030 if original specification was 3036
Application:	**Steer Axle**	**Front/Rear**	**Rear/Rear**	**Comments**
2006+ Mack spring suspension with optional long stroke brake chambers	**1427901 C24L** **1428901 C24L3** **1431901 C30L3**	**3231951 TR3030LP3T** **3235951 TR3036L3T**	**3233953 TR3030LP3THD** **3235954 TR3036L3T**	Make sure long stroke and standard stroke are not mixed on the same axle
Application:	**Steer Axle**	**Front/Rear**	**Rear/Rear**	**Comments**
2005+ Autocar and 2005 - April 2013 Peterbilt/Kenworth	1427001 C24L **1427904 C24L**	**3431956 TR3030T**	**3431956 TR3030T**	Peterbilt/Kenworth up to April 2013
Application:	**Steer Axle**	**Front/Rear**	**Rear/Rear**	**Comments**
Peterbilt/Kenworth April 2013 to present	**1427901 C24L** **1431901 C30L3**	**3431951 TR3030T** **3235951 TR3036L3T**	**3431951 TR3030T** **3235951 TR3036L3T**	Peterbilt/Kenworth April 2013 to present
Application:	**Steer Axle**	**Rear Axle**	**Rear/Rear**	**Comments**
2007+ Mack with type 3636 on single axle	**1427901 C24L** **1428901 C24L3** **1431901 C30L3**	**3436951 TR3636T**		On steer axle, make sure to change the correct stroke
Application:	**Steer Axle**	**Front Rear**	**Rear/Rear**	**Comments**
2010+ Mack with Primaxx air-suspension	**1428901 C24L3** **1431901 C30L3**	**3433951 TR3036** **3235951 TR3036L3T**	**3433951 TR3036** **3235951 TR3036L3T**	One chamber for both rear axles-welded yoke

NOTE: BOLD = Welded Yoke

FOR THOSE USING 2-PIN SLACK ADJUSTERS, PLEASE NOTE: The welded yoke chamber listed above have a measurement between the pins on the welded yoke of 1.30". If the vehicle's original manufacturer's clevis has a measurement other than 1.30", the welded yoke chamber listed cannot be used and a threaded rod chamber with a clevis utilizing the proper pin spacing recommended by the vehicle's manufacturer should be used instead.

NOTE: Product information and specifications subject to change without notice. Refer to the MGM Brakes website for latest updated information.

FIELD REPLACEMENT OF CHAMBERS EQUIPPED WITH "WELDED" YOKES

Many vehicles are equipped with brake actuators employing a welded yoke construction.

The yoke is welded to the push-rod, making it impractical to remove and re-use it. Unless the non-pressure housing (mounting base), push-rod, and/or yoke have been damaged, or are severely worn or corroded, MGM Brakes recommends replacement of the single/ piggyback as an effective, economical repair for servicing spring brakes.

However, if replacement of the entire brake chamber is required, it is recommended that a unit equipped with a welded yoke be used. Brake chambers with a "Y" dimension less than 2.5 inches must be replaced with a welded yoke construction.

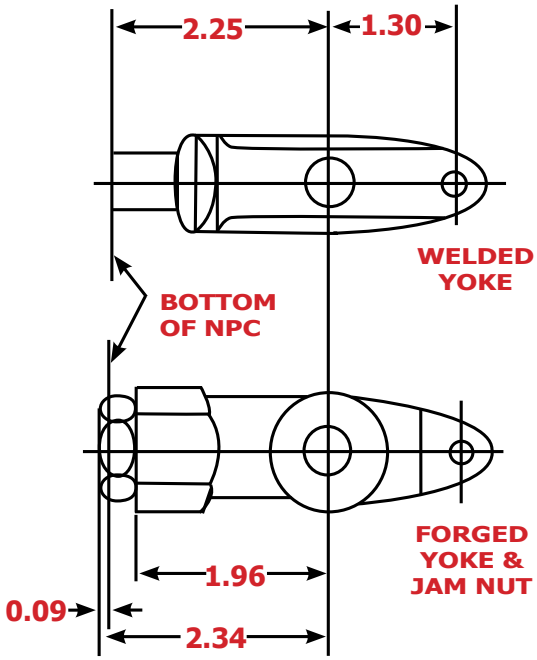

ser

Actuators manufactured with a "welded" yoke that have a fixed "Y" dimension, measured from the bottom of the NPC to the center of the yoke pin, of 2.25" (57.2 mm) must be replaced with a welded yoke type of brake actuator. Because the "Y" dimension is relatively short, the corresponding "X" dimension, measured from the bottom of the NPC to the end of the rod, will also be short, at approximately ¾ of an inch (19.1 mm).

Consequently, if a replacement actuator with a "universal" all-thread cut-to-fit push-rod is used, the jam nut will hit the bottom of the non-pressure housing (mounting base) preventing the service chamber from completely retracting. See the illustration showing 0.09 inches of interference preventing full retraction.

The jam nut will protrude into the NPC and may damage the protective stone shield, if the push-rod opening in the NPC is large enough.

MGM Brakes recommends any brake actuator with a welded yoke construction having a 2.5 inch "Y" dimension or less always be replaced with another actuator with a welded yoke construction, ensuring proper brake service chamber retraction.

Spring brakes and service chambers must fully retract in order to completely release the foundation brakes which ensures the lining no longer contacts the drum. Improper set-up may prevent the slack adjuster from properly adjusting. The actuator life will also be reduced significantly if it is not able to fully retract.

NOTE: The listing above is based on known specifications of various manufacturers; however, certain applications may differ than shown. MGM suggests contacting the truck's manufacturer to verify the proper chamber and rod length to assure proper chamber replacement.

NOTE: FOR THOSE USING 2-PIN SLACK ADJUSTERS, PLEASE NOTE: The welded yoke chamber listed above have a measurement between the pins on the welded yoke of 1.30". If the vehicle's original manufacturer's clevis has a measurement other than 1.30", the welded yoke chamber listed cannot be used and a threaded rod chamber with a clevis utilizing the proper pin spacing recommended by the vehicle's manufacturer should be used instead.

WARNING: Every day, more and more vehicles are being manufactured with spring brake actuators and service chambers with the yoke welded to the service push-rod.

Units manufactured with a welded yoke have a preset "Y" dimension, measured from the bottom of the NPC to the center-line of the yoke pin. There are many different preset "Y" dimensions depending on the application. It is very important that you obtain this "Y" measurement from your current chamber in order to replace "like for like" to continue proper operation.

NOTE: Product information and specifications subject to change without notice. Refer to the MGM Brakes website for latest updated information.

WELDED YOKES

THE ONLY WAY TO RUN YOUR VEHICLE!

Why?

TIME

- Reduce chamber replacement time
- No push-rod cutting required, made for easy install
- Maintain exact OEM chamber to slack adjuster factory set-up
- Will fit single and most dual pin slack adjusters
- Reduce road call time with a few of the most popular parts
- Common part numbers for a variety of make and model of trucks and tractors

SAFETY

- Maintain OEM engineered safety (incorrect rod cutting can affect proper brake adjustment)

DISCLAIMER: FOR THOSE USING 2-PIN SLACK ADJUSTERS, PLEASE NOTE: The welded yoke chambers have a measurement between the pins on the welded yoke of 1.30". If the vehicle's original manufacturer's clevis has a measurement other than 1.30", the welded yoke chamber listed cannot be used and a threaded rod chamber with a clevis utilizing the proper pin spacing recommended by the vehicle's manufacturer should be used instead.

MGM Brakes
A Division of Indian Head Industries, Inc.

VOCATIONAL APPLICATIONS

WWW.MGMBRAKES.COM

WELDED YOKES APPLICATION GUIDE

P/N	MODEL	DESCRIPTION
MJS3024ET951	MJS3024ET	Combination - Welded Yoke - Y = 2.25”
MJS3028ET951	MJS3028ET	Combination - Welded Yoke - Y = 2.25”
MJS3030ET951	MJS3030ET	Combination - Welded Yoke - Y = 2.25”
MJS3030ET953	MJS3030ET	Combination - Welded Yoke - Y = 4.20”
MJS3030ET955	MJS3030ET	Combination - Welded Yoke - Y = 2.87”
MJS3630ET951	MJS3630ET	Combination - Welded Yoke - Y = 2.25”
1427901	C24L	Service Chamber - Welded Yoke - Y = 2.25”
1427902	**C24L**	**Service Chamber - Stainless Steel Yoke Pin, Welded Yoke - Y = 2.25”, Neoprene Diaphragm**
1427904	**C24L**	**Service Chamber - Stainless Steel Yoke Pin, Welded Yoke - Y = 2.87”, Neoprene Diaphragm**
1428901	C24L3	Service Chamber - Welded Yoke - Y=2.25”
1428902	**C24L3**	**Service Chamber - Stainless Steel Yoke Pin, Welded Yoke - Y = 2.25”, Neoprene Diaphragm**
1430901	C30	Service Chamber - Welded Yoke - Y=2.25”
1430902	**C30**	**Service Chamber - Stainless Steel Yoke Pin, Welded Yoke - Y = 2.25”, Neoprene Diaphragm**
1430904	**C30**	**Service Chamber - Stainless Steel Yoke Pin, Welded Yoke - Y = 2.87”, Neoprene Diaphragm**
1431901	C30L3	Service Chamber - Welded Yoke - Y = 2.25”
1431902	**C30L3**	**Service Chamber - Stainless Steel Yoke Pin, Welded Yoke - Y = 2.25”, Neoprene Diaphragm**
1617901	CS16LH	Service Chamber - Welded Yoke - Y = 2.25”
1621901	CS20L	Service Chamber - Welded Yoke - Y = 2.25”
1628901	CS24L3	Service Chamber - Welded Yoke - Y = 2.25”
1628902	**CS24L3**	**Service Chamber - Stainless Steel Yoke Pin, Welded Yoke - Y = 2.25”, Neoprene Diaphragm**
1630901	CS30	Service Chamber - Welded Yoke - Y = 2.25”
1630902	**CS30**	**Service Chamber - Stainless Steel Yoke Pin, Welded Yoke - Y = 2.25”, Neoprene Diaphragm**
1631901	CS30L3	Service Chamber - Welded Yoke - Y = 2.25”
1631902	**CS30L3**	**Service Chamber - Stainless Steel Yoke Pin, Welded Yoke - Y = 2.25”, Neoprene Diaphragm**
1641901 ##	CS24L3W	Service Chamber - Welded NPC, Welded Yoke - Y = 2.25"
1641902 ##	**CS24L3W**	**Service Chamber - Stainless Steel Yoke Pin, Welded NPC, Welded Yoke, Y = 2.25", Neoprene Diaphragm**
1641904 ##	**CS24L3W**	**Service Chamber - Stainless Steel Yoke Pin, Welded NPC, Welded Yoke, Y = 2.87", Neoprene Diaphragm**
3224951	TR2430LP3	Combination - Welded Yoke - Y = 2.25”
3226951	TR2430LP3HD	Combination - Welded Yoke - Y = 2.25”
3227951 ##	TR2430LP3THD	Combination - Welded Yoke - Y = 2.25”
3230951	TR3030LP3	Combination - Welded Yoke - Y = 2.25”
3230955	TR3030LP3	Combination - Welded Yoke - Y = 3.063”
3231951	TR3030LP3T	Combination - Welded Yoke - Y = 2.25”
3231953	**TR3030LP3T**	**Combination - Stainless Steel Yoke Pin, Welded Yoke - Y = 2.25”, Neoprene Diaphragm**
3231954	TR3030LP3T	Combination - Welded Yoke - Y = 2.87"
3231955	**TR3030LP3T**	**Combination - Stainless Steel Yoke Pin, Welded Yoke - Y = 2.87", Neoprene Diaphragm**
3232951	TR3030LP3HD	Combination - Welded Yoke - Y = 2.25”
3232952	**TR3030LP3HD**	**Combination - Stainless Steel Yoke Pin, Welded Yoke - Y = 2.25”, Neoprene Diaphragm**
3233951	TR3030LP3THD	Combination - Welded Yoke - Y = 2.25”
3233952	**TR3030LP3THD**	**Combination - Stainless Steel Yoke Pin, Welded Yoke - Y = 2.25”, Neoprene Diaphragm**
3233953	**TR3030LP3THD**	**Combination - Stainless Steel Yoke Pin, Welded Yoke - Y = 4.20”, Neoprene Diaphragm**
3234951 ##	TR3036L3	Combination - Welded NPC, Welded Yoke - Y = 2.25”
3235951 ##	TR3036L3T	Combination - Welded NPC, Welded Yoke - Y = 2.25”
3235954 ##	TR3036L3T	Combination - Welded NPC, Welded Yoke - Y = 4.20”
3244951 ##	TR3030LP3THDW	Combination - Welded NPC, Welded Yoke - Y = 2.25”
3430951	TR3030	Combination - Welded Yoke - Y = 2.25”
3430952	TR3030	Combination - Welded Yoke - Y = 4.20”
3430953	**TR3030**	**Combination - Stainless Steel Yoke Pin, Welded Yoke - Y = 2.25”, Neoprene Diaphragm**
3430954	**TR3030**	**Combination - Stainless Steel Yoke Pin, Welded Yoke - Y = 4.20”, Neoprene Diaphragm**
3430955	TR3030	Combination - Welded Yoke - Y = 3.063”

P/N	MODEL	DESCRIPTION
3430956	**TR3030**	**Combination - Stainless Steel Yoke Pin, Welded Yoke - Y = 2.87", Neoprene Diaphragm**
3431951	TR3030T	Combination - Welded Yoke - Y = 2.25"
3431952	TR3030T	Combination - Welded Yoke - Y = 4.20"
3431953	**TR3030T**	**Combination - Stainless Steel Yoke Pin, Welded Yoke - Y = 2.25", Neoprene Diaphragm**
3431954	**TR3030T**	**Combination - Stainless Steel Yoke Pin, Welded Yoke - Y = 4.20", Neoprene Diaphragm**
3431955	**TR3030T**	**Combination - Stainless Steel Yoke Pin, Welded Yoke - Y = 2.87", Neoprene Diaphragm**
3431956	TR3030T	Combination - Welded Yoke - Y = 2.87"
3431957	**TR3030T**	**Combination - Stainless Steel Yoke Pin, Welded Yoke, Neoprene Diaphragm - Y = 2.50"**
3431958	TR3030T	Combination - Welded Yoke - Y = 3.00"
3432951	TR3036T	Combination - Welded Yoke - Y = 2.25"
3432952	**TR3036T**	**Combination - Stainless Steel Yoke Pin, Welded Yoke - Y = 2.25", Neoprene Diaphragm**
3433951	TR3036	Combination - Welded Yoke - Y = 2.25"
3436951	TR3636T	Combination - Welded Yoke - Y = 2.25"
3436952	**TR3636T**	**Combination - Stainless Steel Yoke Pin, Welded Yoke, Neoprene Diaphragms - Y = 2.25"**
3437951	TR3636	Combination - Welded Yoke - Y = 2.25"
3444955 ##	**TR3030THDW**	**Combination - Stainless Steel Yoke Pin, Welded NPC, Welded Yoke - Y = 2.87", Neoprene Diaphragm**
3531951	TR3030TS	Combination - Stainless Steel Yoke Pin, Welded Yoke - Y = 2.25"
3531952	TR3030TS	Combination - Stainless Steel Yoke Pin, Welded Yoke - Y = 4.20"
3531953	**TR3030TS**	**Combination - Stainless Steel Yoke Pin, Welded Yoke - Y = 2.25", Neoprene Diaphragm**
3531954	**TR3030TS**	**Combination - Stainless Steel Yoke Pin, Welded Yoke - Y = 4.20", Neoprene Diaphragm**
3531955	**TR3030TS**	**Combination - Stainless Steel Yoke Pin, Welded Yoke - Y = 2.87", Neoprene Diaphragm**
3532951	TR3036TS	Combination - Stainless Steel Yoke Pin, Welded Yoke - Y = 2.25"
3532952	TR3036TS	Combination - Stainless Steel Yoke Pin, Welded Yoke - Y = 4.20"
3532953	**TR3036TS**	**Combination - Stainless Steel Yoke Pin, Welded Yoke - Y = 4.20", Neoprene Diaphragm**
3532954	**TR3036TS**	**Combination - Stainless Steel Yoke Pin, Welded Yoke - Y = 2.25", Neoprene Diaphragm**
3532955	**TR3036TS**	**Combination - Stainless Steel Yoke Pin, Welded Yoke - Y = 2.87", Neoprene Diaphragm**
3534951	TR3030LP3TSHD	Combination - Stainless Steel Yoke Pin, Welded Yoke - Y = 2.25"
3535951	TR3030LP3TS	Combination - Stainless Steel Yoke Pin, Welded Yoke - Y = 2.25"
3535952	**TR3030LP3TS**	**Combination - Stainless Steel Yoke Pin, Welded Yoke - Y = 2.25", Neoprene Diaphragm**
3535953	**TR3030LP3TS**	**Combination - Stainless Steel Yoke Pin, Welded Yoke - Y = 4.20", Neoprene Diaphragm**
3545951 ##	TR3030LP3TSHDW	Combination - Stainless Steel Yoke Pin, Welded NPC, Welded Yoke - Y = 2.25"
3545953 ##	**TR3030LP3TSHDW**	**Combination - Stainless Steel Yoke Pin, Welded NPC, Welded Yoke - Y = 2.25", Neoprene Diaphragm**
3545954 ##	**TR3030LP3TSHDW**	**Combination - Stainless Steel Yoke Pin, Welded NPC, Welded Yoke - Y = 4.20", Neoprene Diaphragm**
3545955 ##	**TR3030LP3TSHDW**	**Combination - Stainless Steel Yoke Pin, Welded NPC, Welded Yoke - Y = 2.87", Neoprene Diaphragm**
3545956 ##	**TR3030LP3TSHDW**	**Combination - Stainless Steel Yoke Pin, Welded NPC, Welded Yoke - Y = 2.87", Neoprene Diaphragm**
3631951	TR3030THD	Combination - Welded Yoke - Y = 2.25"
3828951	LTR2430L3	Combination - Welded Yoke - Y = 2.25"
3832951	LTR3030L3	Combination - Welded Yoke - Y = 2.25"
3833951	LTR3030L3T	Combination - Welded Yoke - Y = 2.25"
3844951 ##	LTR3030L3W	Combination - Welded NPC, Welded Yoke - Y = 2.25"
LTS3030ET951	LTS3030ET	Combination - Stainless Steel Yoke Pin, Welded Yoke - Y = 2.25"
LTS3030ET952	LTS3030ET	Combination - Stainless Steel Yoke Pin, Welded Yoke - Y = 4.20"
LTS3030ET953	LTS3030ET	Combination - Stainless Steel Yoke Pin, Welded Yoke - Y = 11.10"

MODEL KEY				NOTES
TR	Tamper Resistant	**CS**	Sealed Service Chamber	## Designates welded NPC
LP3, L3	3" Long Stroke	**T**	Breather Tube	**BOLD BLACK** indicates Waste/Refuge (neoprene)
LTR	Long Life (limited 6 year warranty for on-highway vehicles)	**HD**	Heavy Duty	Replace "like for like". Do not mix welded yoke/threaded rod chambers
LTS	Long Life - Compact Model	**TS**	Severe Service (epoxy coated throughout)	Y-dimension measured w/brake released from mounting base to center-line of yoke pin
MJS	Piston Brake	**W**	Weld Reinforced Mounting Bolts	Stainless steel yoke pins available for both welded yoke/threaded rod
C	Service Chamber			Welded yoke kit P/N: 9092012P

SPECIAL APPLICATION BRAKES

Extra length push-rod applications
Hendrickson Intraax/Vantraax applications
School bus and fire truck applications

American Owned Worldwide
MGM BRAKES
Made in the U.S.A. of Domestic & Imported Parts

Page(s)

Section 6: Special Applications..... 106-113

Special Length Push-Rods.....108

Hendrickson Intraax and Vantraax Suspension Applications 109

12” and 18” Extended Length Push-Rods 110

School Bus Applications 112

Fire Truck Applications 113

NOTE: Product information and specifications subject to change without notice. Refer to the MGM Brakes website for latest updated information.

Special Length Push-Rods

VMRS # 13-004-000

Available aftermarket options & part numbers for assemblies requiring "X" dimensions longer than standard 8.00" (203.2 mm) fully threaded push-rod.						
All Models	**Type 24**		**Type 30**		**Type 36**	
"X" Dimension	12.00" (304.8 mm)	18.00" (457.2 mm)	12.00" (304.8 mm)	18.00" (457.2 mm)	12.00" (304.8 mm)	18.00" (457.2 mm)
Push-Rod Diameter	5/8" (15.9 mm)	3/4" (19.1 mm)	5/8" (15.9 mm)	3/4" (19.1 mm)	5/8" (15.9 mm)	3/4" (19.1 mm)
Threaded Length	5.00" (127.0 mm)	7.00" (177.8 mm)	5.00" (127.0 mm)	7.00" (177.8 mm)	3.00" (76.2 mm)	9.00" (228.6 mm)
Part Number Suffix	xxxx551	xxxx651	xxxx551	xxxx651	xxxx551	xxxx651
Kit - Push-Rod Assembly	9064553	9064653	9064551	9064651	9064552	9064652

NOTE: Generic replacement parts for Hendrickson Intraax / Vantraax Suspension ends in 551 suffix.
NOTE: We offer some direct OEM replacement part numbers for transit applications. Contact MGM Brakes customer service for details.
NOTE: xxxx represents: P/N series for model groups.

TR-T Model

TR-LP3T Model

LTR-L3T Model

LTS Model

MJS Model

NOTE: For yoke pin and mounting hardware replacement parts refer to Section 9.
For custom replacement assemblies, contact MGM Brakes Sales.

NOTE: Product information and specifications subject to change without notice. Refer to the MGM Brakes website for latest updated information.

Hendrickson Intraax and Vantraax Suspension Applications

PART NUMBER	MODEL	STROKE	DESCRIPTION	
MJS3028ET551	MJS3028ET	LS	5/8" x 12" Push-rod, 5" threaded	Piston
MJS3030ET551	MJS3030ET	LS	5/8" x 12" Push-rod, 5" threaded	Piston
MJS3630ET551	MJS3630ET	LS	5/8" x 12" Push-rod, 5" threaded	Piston
3230551	TR3030LP3	LS	5/8" x 12" Push-rod, 5" threaded	Double Diaphragm
3230555*	TR3030LP3	LS	5/8" x 12" Fully Threaded Push-rod	Double Diaphragm
3230957	TR3030LP3	LS	**5/8" x 11.10" Push-rod w/Welded Yoke**	Double Diaphragm
3231551	TR3030LP3T	LS	5/8" x 12" Push-rod, 5" threaded	Double Diaphragm
3231959	TR3030T	LS	**5/8" x 11.10" Push-rod w/Welded Yoke**	Double Diaphragm
3232551	TR3030LP3HD	LS	5/8" x 12" Push-rod, 5" threaded	Double Diaphragm
3430551	TR3030	SS	5/8" x 12" Push-rod, 5" threaded	Double Diaphragm
3430555**	TR3030	SS	5/8" x 12" Fully Threaded Push-rod	Double Diaphragm
3430957	TR3030	SS	**5/8" x 11.10" Push-rod w/Welded Yoke**	Double Diaphragm
3431551	TR3030T	SS	5/8" x 12" Push-rod, 5" threaded	Double Diaphragm
3431959	TR3030T	SS	**5/8" x 11.10" Push-rod w/Welded Yoke**	Double Diaphragm
3436551	TR3636T	SS	5/8" x 12" Push-rod, 5" threaded	Double Diaphragm
3531551	TR3030TS	SS	5/8" x 12" Push-rod, 5" threaded	Double Diaphragm
3534551	TR3030LP3TSHD	LS	5/8" x 12" Push-rod, 5" threaded	Double Diaphragm
3535551	TR3030LP3TS	LS	5/8" x 12" Push-rod, 5" threaded	Double Diaphragm
3535957	TR3030LP3TS	LS	**5/8" x 11.10" Push-rod w/Welded Yoke**	Double Diaphragm
3631551	TR3030THD	SS	5/8" x 12" Push-rod, 5" threaded	Double Diaphragm
3831551	LTR3030T	SS	5/8" x 12" Push-rod, 5" threaded	Double Diaphragm
3832551	LTR3030L3	LS	5/8" x 12" Push-rod, 5" threaded	Double Diaphragm
3833953	LTR3030L3T	LS	**5/8" x 11.10" Push-rod w/Welded Yoke**	Double Diaphragm
3844551	LTR3030L3W	LS	5/8" x 12" Push-rod, 5" threaded	Double Diaphragm
LTS3030ET551	LTS3030ET	LS	5/8" x 12" Push-rod, 5" threaded	Double Diaphragm
LTS3030ET552	LTS3030ET	LS	5/8" x 12" Push-rod, 5" threaded	Double Diaphragm
LTS3030ET555	LTS3030ET	LS	5/8" x 12" Fully Threaded Push-rod	Double Diaphragm
LTS3030ET953	LTS3030ET	LS	**5/8" X 11.10" Push-rod w/Welded Yoke**	Double Diaphragm

NOTE: *3230555 Can be used to replace 3230051 and 3230551

NOTE: **3430555 Can be used to replace 3430051 and 3430551

LEGEND	
TR	Tamper Resistant
LTR/LTS	Long Life Tamper Resistant
LS	Long Stroke - 3.00"
SS	Standard Stroke - 2.50"
T	Tube
TS	Tube/Severe Service
HD	Heavy Duty Spring
W	Welded NPC

NOTE: FOR THOSE USING 2-PIN SLACK ADJUSTERS: The welded yoke chambers listed above have a measurement between the pins on the welded yoke of 1.30". If the vehicle's original manufacturer's clevis has a measurement other than 1.30", the welded yoke chambers listed cannot be used and a threaded rod chamber with a clevis utilizing the proper pin spacing recommended by the vehicle's manufacturer should be used instead.

NOTE: Product information and specifications subject to change without notice. Refer to the MGM Brakes website for latest updated information.

12” and 18” Extended Length Push-Rods

P/N	MODEL	STROKE	DESCRIPTION
MJS2424ET551	MJS2424ET	3.00”	5/8” x 12” Push-Rod
MJS3028ET551	MJS3028ET	3.00”	5/8” x 12” Push-Rod
MJS3028ET651	MJS3028ET	3.00”	3/4” x 18” Push-Rod
MJS3030ET551	MJS3030ET	3.00”	5/8” x 12” Push-Rod
MJS3630ET551	MJS3630ET	3.00”	5/8” x 12” Push-Rod
3230551	TR3030LP3	3.00”	5/8” x 12” Push-Rod
3230651	TR3030LP3	3.00”	3/4” x 18” Push-Rod
3231551	TR3030LP3T	3.00”	5/8” x 12” Push-Rod
3231651	TR3030LP3T	3.00”	3/4” x 18” Push-Rod
3232551	TR3030LP3HD	3.00”	5/8” x 12” Push-Rod
3232651	TR3030LP3HD	3.00”	3/4” x 18” Push-Rod
3233551	TR3030LP3THD	3.00”	5/8” x 12” Push-Rod
3233651	TR3030LP3THD	3.00”	3/4” x 18” Push-Rod
3427551	TR2424L	2.50”	5/8” x 12” Push-Rod
3428551	TR2430LT	2.50”	5/8” x 12” Push-Rod
3429551	TR2430L	2.50”	5/8” x 12” Push-Rod
3429651	TR2430L	2.50”	3/4” x 18” Push-Rod
3430551	TR3030	2.50”	5/8” x 12” Push-Rod
3430651	TR3030	2.50”	3/4” x 18” Push-Rod
3431551	TR3030T	2.50”	5/8” x 12” Push-Rod
3431651	TR3030T	2.50”	3/4” x 18” Push-Rod
3436551	TR3636T	3.00”	5/8” x 12” Push-Rod
3436651	TR3636T	3.00”	3/4” x 18” Push-Rod
3437551	TR3636	3.00”	5/8” x 12” Push-Rod
3437651	TR3636	3.00”	3/4” x 18” Push-Rod
3531551	TR3030TS	2.50”	5/8” x 12” Push-Rod
3531651	TR3030TS	2.50”	3/4” x 18” Push-Rod
3534551	TR3030LP3TSHD	3.00”	5/8” x 12” Push-Rod
3534651	TR3030LP3TSHD	3.00”	3/4” x 18” Push-Rod
3535551	TR3030LP3TS	3.00”	5/8” x 12” Push-Rod
3535651	TR3030LP3TS	3.00”	3/4” x 18” Push-Rod
3536551	TR3636TS	3.00”	5/8” x 12” Push-Rod
3536651	TR3636TS	3.00”	3/4” x 18” Push-Rod
3631551	TR3030THD	2.50”	5/8” x 12” Push-Rod
3831551	LTR3030T	2.50”	5/8” x 12” Push-Rod
3831651	LTR3030T	2.50”	3/4” x 18” Push-Rod
3832551	LTR3030L3	3.00”	5/8” x 12” Push-Rod
3832651	LTR3030L3	3.00”	3/4” x 18” Push-Rod
3833551	LTR3030L3T	3.00”	5/8” x 12” Push-Rod
3844551	LTR3030L3W	3.00”	5/8” x 12” Push-Rod
LTS3030ET551	LTS3030ET	3.00”	5/8” x 12” Push-Rod
LTS3030ET651	LTS3030ET	3.00”	3/4” x 18” Push-Rod

NOTE: Product information and specifications subject to change without notice. Refer to the MGM Brakes website for latest updated information.

LTS
LONG LIFE
SPRING BRAKES

Featuring
Compact Design

- **Center Hole Diaphragm**
- **Integral Release Bolt**
- **Corrosion Fighter Technology**
- **Long Stroke Design**
- **Breather Tube Technology**
- **Threaded Rod or Welded Yoke Technology**

BUILT TOUGH

Designed for superior performance and lower total cost of ownership

The Ultimate Long-Life spring brake chamber for all truck and trailer applications providing exceptional service in a compact design. For trailers with Hendrickson Intraxx/Vantraxx suspensions, the LTS chamber is designed to provide dependable service in all weather conditions.

- Available with fully-threaded rod or welded yoke for Intraxx/VanTraxx applications.
- Integral manual release bolt provides ease of installation and removal. Release bolt seals the chamber, no rubber plugs needed.
- Sealed chamber design via breather tube technology prevents ingestion of foreign contamination.
- Proudly manufactured in the U.S.A.
- Compact design provides for installation without clearance issues.

School Bus Applications

SCHOOL BUS DRUM BRAKE APPLICATIONS		
5 YEAR WARRANTY LONG STROKE BRAKE CHAMBERS		
P/N	**MODEL**	**APPLICATION/DESCRIPTION**
3523951	TR3030LP3TS	2430 Chamber - Welded Yoke
3527951 **	TR2430LP3TSHD	2430 Chamber - Welded Yoke - Heavy Duty Parking Spring
3531951	TR3030LP3TS	3030 Chamber - Welded Yoke
3534951 **	TR3030LP3TSHD	3030 Chamber - Welded Yoke - Heavy Duty Parking Spring
4 YEAR WARRANTY LONG STROKE BRAKE CHAMBERS		
P/N	**MODEL**	**APPLICATION/DESCRIPTION**
3225951	TR2430LP3T	2430 Chamber - Welded Yoke
3227951 **	TR2430LP3THD	2430 Chamber - Welded Yoke - Heavy Duty Parking Spring
3231951	TR3030LP3T	3030 Chamber - Welded Yoke
3233951 **	TR3030LP3THD	3030 Chamber - Welded Yoke - Heavy Duty Parking Spring
3 YEAR WARRANTY LONG STROKE BRAKE CHAMBERS		
P/N	**MODEL**	**APPLICATION/DESCRIPTION**
3224951	TR2430LP3	2430 Chamber - Welded Yoke
3226951 **	TR2430LP3HD	2430 Chamber - Welded Yoke - Heavy Duty Parking Spring
3230951	TR3030LP3	3030 Chamber - Welded Yoke
3232951 **	TR3030LP3HD	3030 Chamber - Welded Yoke - Heavy Duty Parking Spring
3 YEAR WARRANTY LONG STROKE SERVICE CHAMBERS		
P/N	**MODEL**	**APPLICATION/DESCRIPTION**
1621901	CS20L	Type 20 Sealed
1428901	C24L3	Type 24
1431901	CL30L3	Type 30
RECOMMENDED REPLACEMENT PARTS		
P/N	**APPLICATION/DESCRIPTION**	
8038012	½" Stainless Steel Clevis Pin	
8038016	¼" Stainless Steel Clevis Pin	
8151001X*	Cotter Pin for ½" Clevis Pin *8 pc. bulk pack	
8051003X*	Cotter Pin for ¼" Clevis Pin *8 pc. bulk pack	

NOTES: * 8 pc. bulk pack, ** Recommended for International Buses (applicable to all), ## All chambers have 2.25" (2¼") Y-dimension

SCHOOL BUS AIR DISC CHAMBER APPLICATIONS				
APPLICATION	**SIZE**	**MGM MODEL**	**MGM PART NUMBER**	**MGM WARRANTY**
Service	18	CSB18D	CSB18D051	3 Years
Service	20	CSB20D	CSB20D051	3 Years
Service	22	CSB22D	CSB22D051	3 Years
Drive	1824	TRB1824DT	TRB1824DT051	4 Years
Drive	2024	TRB2024DT	TRB2024DT051	4 Years
Drive	2224	TRB2224DT	TRB2224DT051	4 Years
Drive	1824	MJB1824DT	MJB1824DT051	6 Years
Drive	2024	MJB2024DT	MJB2024DT051	6 Years
Drive	2224	MJB2224DT	MJB2224DT051	6 Years

NOTE: Product information and specifications subject to change without notice. Refer to the MGM Brakes website for latest updated information.

Fire Truck Applications

FIRE TRUCK DRUM BRAKE APPLICATION				
P/N SERIES	MJS3024ET	MJS3028ET	MJS3030ET	MJS3628ET
MODEL	MJS3024ET	MJS3028ET	MJS3030ET	MJS3628ET
SIZE	3024	3028	3030	3628
STROKE	3.00" (76.2 MM)	3.00" (76.2 MM)	3.00" (76.2 MM)	3.00" (76.2 MM)
P/N COMBINATION SAE	MJS3024ET051	MJS3028ET051	MJS3030ET051	MJS3628ET051
P/N PIGGYBACK PLUS KIT SAE	MJS3024ET008	MJS3028ET008	MJS3030ET008	MJS3628ET008
P/N COMBINATION METRIC	MJS3024ET049	MJS3028ET049	MJS3030ET049	MJS3628ET049

FIRE TRUCK AIR DISC CHAMBER APPLICATION				
APPLICATION	SIZE	MGM MODEL	MGM PART NUMBER	MGM WARRANTY
SERVICE	18	CSB18D	CSB18D051	3 YEARS
SERVICE	20	CSB20D	CSB20D051	3 YEARS
SERVICE	22	CSB22D	CSB22D051	3 YEARS
SERVICE	24	CSB24D	CSB24D051	3 YEARS
DRIVE	1824	TRB1824DT	TRB1824DT051	3 YEARS
DRIVE	2024	TRB2024DT	TRB2024DT051	3 YEARS
DRIVE	2224	TRB2224DT	TRB2224DT051	3 YEARS
DRIVE	2424	TRB2424DT	TRB2424DT051	3 YEARS
DRIVE	2430	TRB2430DT	TRB2430DT051	3 YEARS
DRIVE	1824	MJB1824DT	MJB1824DT051	4 YEARS
DRIVE	2024	MJB2024DT	MJB2024DT051	4 YEARS
DRIVE	2224	MJB2224DT	MJB2224DT051	4 YEARS
DRIVE	2424	MJB2424DT	MJB2424DT051	4 YEARS

MJS Model

MJB Model

TRB Model

CSB Model

NOTE: Product information and specifications subject to change without notice. Refer to the MGM Brakes website for latest updated information.

ROAD TRUCK CHAMBER APPLICATIONS

For Trucks, Tractors, and Trailers

- Line Haul/Over the Road
- Local Pickup and Delivery
- Final Mile

American Owned
MGM BRAKES
Worldwide

MGM BRAKES - TRACTOR/TRAILER QUICK REFERENCE CHAMBER REPLACEMENT GUIDE

THREADED ROD BRAKE CHAMBERS - DRUM BRAKES
PETERBUILT, KENWORTH,FREIGHTLINER, STERLING, WESTERN STAR, VOLVO, INTERNATIONAL, MACK, HINO

STANDARD STROKE					LONG STROKE				
STEER AXLE	MODEL	1ST DRIVE	2ND DRIVE DOUBLE	2ND DRIVE SERVICE	STEER AXLE	MODEL	1ST DRIVE	2ND DRIVE DOUBLE	2ND DRIVE SERVICE
1421001 Type 20L	TR	3430051	3430051	1427001 Type 24L	1428001 Type 24L3	TR3030	3230051	3230051	1428001 Type 24L3
1427001 Type 24L	TR-T	3431051	3431051	1430001 Type 30	1431001 Type 30L3	TR3036	3234051	3234051	1431001 Type 30L3
1430001 Type 30	TR-TS	3531051	3531051			TR-T	3231051	3231051	
						TR-TS	3535051	3535051	
						LTS	LTS3030ET051	LTS3030ET051	
						MJS	MJS3024ET051	MJS3024ET051	

ALL TRACTORS - WELDED YOKE CHAMBERS - DRUM BRAKES
FREIGHTLINER, STERLING, WESTERN STAR (2002 +), CATERPILLAR, MACK AND VOLVO (2006 +), PETERBUILT AND KENWORTH (APRIL 2013 +)

STANDARD STROKE					LONG STROKE				
STEER AXLE	MODEL	1ST DRIVE	2ND DRIVE DOUBLE	2ND DRIVE SERVICE	STEER AXLE	MODEL	1ST DRIVE	2ND DRIVE DOUBLE	2ND DRIVE SERVICE
1421901 Type 20L	TR	3430951	3430951	1427901 Type 24L	1428901 Type 24L3	TR	3530951	3530951	1428901 Type 24L3
1427901 Type 24L	TR-T	3431951	3431951	1430901 Type 30	1431901 Type 30L3	TR-T	3231951	3231951	1431901 Type 30L3
1430901 Type 30	TR-TS	3531951	3531951			TR-TS	3535951	3535951	
						LTS	LTS3030ET951	LTS3030ET951	
						MJS	MJS3024ET951	MJS3024ET951	

TRACTORS - DISC BRAKES

STEER AXLE	SIZE	REAR AXLE DOUBLE DIAPHRAGM	SIZE	REAR AXLE PISTON BRAKE	SIZE
CSB16D051	Type 16	TRB1624DT051	1624	MJB1624DT051	1624
CSB18D051	Type 18	TRB1824DT051	1824	MJB1824DT051	1824
CSB20D051	Type 20	TRB2024DT051	2024	MJB2024DT051	2024
CSB22D051	Type 22	TRB2224DT051	2224	MJB2224DT051	2224
CSB24D051	Type 24	TRB2424DT051	2424	MJB2424DT051	2424

TRAILERS - DRUM AND DISC BRAKES

DRUM BRAKE P/N	SIZE/TYPE	REAR AXLE DOUBLE DIAPHRAGM - DISC	SIZE	REAR AXLE PISTON BRAKE - DISC	SIZE
3430051	3030 standard stroke thread	TRB1624DT051	1624	MJB1624DT051	1624
3430551	3030 standard stroke INTRAAX thread	TRB1824DT051	1824	MJB1824DT051	1824
3230051	3030 long stroke thread	TRB2024DT051	2024	MJB2024DT051	2024
3230551	3030 long stroke INTRAAX thread	TRB2224DT051	2224	MJB2224DT051	2224
3230957	3030 long stroke INTRAAX welded	TRB2424DT051	2424	MJB2424DT051	2424

FOR THOSE USING 2-PIN SLACK ADJUSTERS, PLEASE NOTE: The welded-yoke chamber listed above have a between the pins on the welded-yoke of 1.30". If the vehicle's original manufacturer's clevis has a measurement other than 1.30", the welded-yoke chamber listed cannot be used and a threaded-rod chamber with a clevis utilizing the proper pin spacing recommended by the vehicle's manufacturer should be used instead.

e-STROKE®

Electronic Brake Monitoring System

Monitor Brake Stroke—
Increase Safety, Reduce Costs
For Drum and Air Disc Brakes

American Owned · Vertical Performance & Integration
MGM BRAKES Worldwide
Made in the U.S.A. of Domestic & Imported Parts

Page(s)

Section 8: e•STROKE® – Brake Monitoring Systems 116-131

Introduction 118

How e•STROKE® Works 119-120

e•STROKE® Specifications 122

e•STROKE® Diagnostics 123

e•STROKE® Training and Support 125-127

e•STROKE® System Parts - ECU Power and Auxiliary Cables 128

e•STROKE® System Parts - Actuator Sensors and Harnesses 128

e•STROKE® System Parts - Pressure Transducer and Harnesses 129

e•STROKE® System Parts - GEN 3 ECU's 130

e•STROKE® System Parts - GEN 1 & 2 ECU Replacement Service Kits 130

e•STROKE® System Parts - Diagnostic Tools 131

e•STROKE® System Features	
✓	Promotes SAFETY
✓	Check brake stroke status & pinpoint brake problems
✓	Wheel & problem-specific monitoring in real time
✓	Diagnostic tools
✓	Electronic Control Unit (ECU) with fault history storage
✓	Actuator stroke sensing components are factory installed and calibrated to ensure optimal in service performance
✓	Sensors are field replaceable
✓	Durable cables made with double insulated high strength jacketing & industry standard water-proof connectors
✓	Highly accurate, patented design
✓	Operating temperature: -40°F to +176°F (-40°C to +80°C)

NOTE: Product information and specifications subject to change without notice. Refer to the MGM Brakes website for latest updated information.

Verifying proper brake set-up on commercial air-braked vehicles has historically been a significant problem in our industry. While daily pre-trip brake inspections are required, they are seldom performed due to the time and difficulty required with current brake systems designs. Out-of-adjustment brakes continue to be one of the top out of service violations noted at road-side inspections.

Newer commercial vehicles may include systems such as roll stability, lane departure, adaptive cruise control which improve safety and reliability. These systems do however require the vehicles foundation brakes, suspension and tires to be in good working order. The safety technology pyramid shown below illustrates the importance of maintaining the brake system and also knowing the condition during operation.

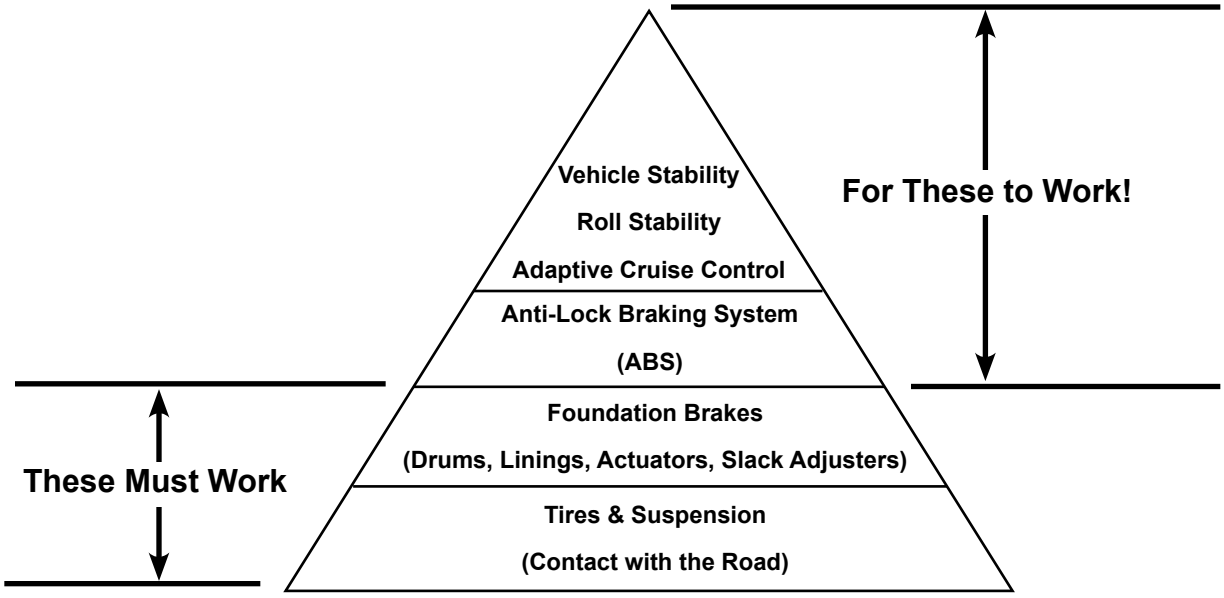

The e•STROKE® brake monitoring system preforms a critical function which helps ensure the driver stays safe and the fleet gets the most out of the vehicle investment.

Based on this need, MGM developed e•STROKE® in 1996, an electronic brake monitoring system. e•STROKE® utilizes sensors mounted inside the brake actuator to measure actual brake stroke every time the brakes are applied. The system can be utilized as a real time brake condition monitor as well as a diagnostic tool in the shop. Checking brake function prior to departure as well as continuous monitoring while underway is important to ensure the safety of the vehicle and its cargo.

MGM has over 20 years of patented electronic brake monitoring experience and development in a wide range of vehicle platforms with system integration across North America. The introductory system used an ECU (Electronic Control Unit) that displayed real-time brake status via LED's and eventually evolved. As challenges continued to arise in the industry; such as the extreme challenges in visually inspecting air disc brakes, MGM continued to adapt the e•STROKE® system to meet market and customer needs. The system continued to advance into MGM's flagship system today which includes features listed below:

- Air Disc Brakes & S-Cam (Drum) Brake Applications
- Expanded Fault Code Storage
- Brake Application Pressure Monitoring
- Configurable Wheel End Support
- Optional Lining Wear Monitoring
- J1939 Integration and Supporting Diagnostics

NOTE: Product information and specifications subject to change without notice. Refer to the MGM Brakes website for latest updated information.

How it Works:

The e•STROKE® Brake Monitoring System utilizes proven electronics, cabling and diagnostic software to provide the user with real-time feedback on the vehicles air brake functionality to accompany stored fault history as well. MGM Brakes patented sensor technology measures actuator push-rod stroke as well as caliper lever arm movement to accurately identify the position of the push-rod. The e•STROKE® system is simultaneously measuring brake application pressure and vehicle speed that will help report potential brake issues as they occur on the vehicle in real time or for memory recall at a later date. For real time alerts, when a fault occurs the system can immediately alert the driver with an optional warning light and additionally transmits the brake issue over the SAE J1939 network for further diagnostic use. All faults, both active and those that have previously occurred are stored in the history of the ECU and can be accessed at any time using any of MGM's diagnostic tools.

The e•STROKE® System Can Diagnose Problems Associated With:

- Inoperable service brakes
- Inoperable or worn brake actuator
- Improper parking brake release by operator

Air-System

- Malfunction with air control system or interlocks
- Air leaks
- Ice or water contamination in the air system
- Defective air valves

S-Cam Drum Foundation Brakes

- Improper brake set-up/adjustment
- Worn bushings (cam tube or spider brake)
- Poor automatic slack operation/maintenance
- Excessive mechanical deflection

Air-Disc Foundation Brakes

- Internal moisture intrusion within a caliper assembly
- Low lining clearance as a result of an over adjusted caliper
- Uneven lining wear

How Do I Identify e•STROKE® Brake Chambers?

e•STROKE® brake chambers are the same as MGM's standard chambers but with the addition of sensor components added for stroke detection. e•STROKE® brake chambers deliver the same performance and durability as standard actuators.

e•STROKE® S-Cam/Drum actuators are identified with an "ESH" suffix at the end of the part number. e•STROKE® drum sensors are plugged into the sensor port located on the mounting surface where the rod enters the service chamber. e•STROKE® Disc actuators are identified with an "ESK" suffix at the end of the part number. e•STROKE® disc sensors include a 0.5" thick spacer which mounts and seals in between the brake actuator and the caliper.

All e•STROKE® sensors may be replaced separately from the actuator. Always replace e•STROKE® brake actuators with the same size and type as what was originally equipped on the vehicle.

NOTE: e•STROKE® Disc actuators are not serviceable and require full replacement if service is necessary.

NOTE: e•STROKE® S-Cam/Drum actuators are serviceable with appropriately sized parts. If replacement of the piggyback on an ESH actuator is required, it is imperative that an MGM piggyback of like size and model be used in order to maintain proper calibration of the e•STROKE® components.

NOTE: Product information and specifications subject to change without notice. Refer to the MGM Brakes website for latest updated information.

e•STROKE® System Functionality Summary & Benefits:

The e•STROKE® system will monitor for typical wheel specific brake fault conditions:

- Non-Functioning Actuator - Fail to apply with brake pressure
- Out-of-Adjustment - Actuator stroke beyond acceptable limit
- Dragging Brake - Fail to release (air system or foundation brake)
- Low Caliper Running Clearance - Alert of potential tight caliper adjustment condition
- Foundation Brake vs. Air Control System - Identify control system issues (valves, air system contamination, ice)

e•STROKE® Electronic Brake Monitoring Features Include:

- ECU is configurable for any combination of s-cam drum or disc brake stroke measurement
- Brake monitoring on up to 4 axles (8 wheel ends)
- Compatible with SAE J1939 250kbs & 500kbs networks
- Stored fault history in ECU for review during PM checks and troubleshooting
- Enhanced diagnostic capability. Optional e•DT™ J1939 hand held diagnostic tool and laptop diagnostic tool kits available

The Benefits of MGM's e•STROKE® System Are:

- Reduce time required for brake inspections
- Reduces downtime and component costs
- Increases brake component life (pads, rotors)
- Improves brake performance and safety
- Reduces liability (wheel fires, brake issues)
- Provides data via AVM (maintenance, driver habits)

If you feel MGM's e•STROKE® brake monitoring product line has benefit to you and your fleet, please contact MGM Brakes Customer Service at: (800) 527-1534 or mail@mgmbrakes.com for additional information about this exciting new technology.

NOTE: Product information and specifications subject to change without notice. Refer to the MGM Brakes website for latest updated information.

MGM Brakes Introduces

e•STROKE®

Brake Monitoring System

BRAKE MONITORING FOR AIR DISC

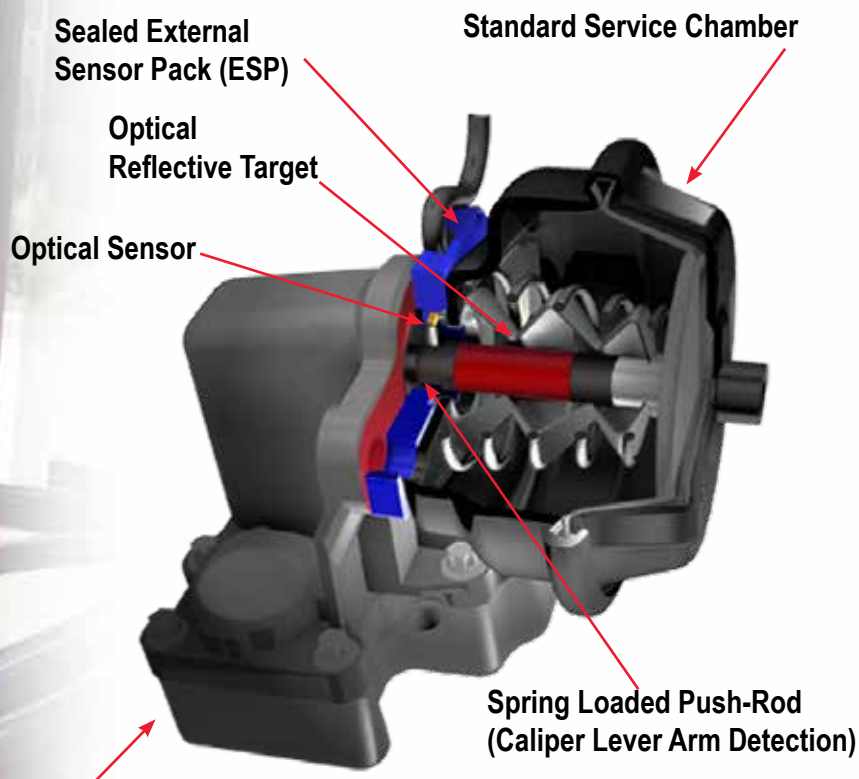

ECU - Electronic Control Unit

e•DT™ Monitor

e•STROKE® – BRAKE MONITORING SYSTEM

WWW.MGMBRAKES.COM

e•STROKE® GEN 3 System Specifications:

Operating temperature:	-40°F - 176°F (-40°C TO 80°C)
Power requirement:	12 / 24V DC - ignition switched
Maximum current draw:	1.5 amps
System fuse:	5 amps
Environmental protection:	SAE J1455 compliant
Electrical protection:	SAE J1455 and SAE J1113 compliant
Foundation brake types:	S-Cam Drum and Air Disc

System Component Specifications:

Electronic Control Unit (ECU)
- Configurations from 2 to 8 wheel ends
- Each axle configurable for air disc or s-cam drum foundation brakes
- Diagnostic interface: J1939 250kbs & 500kbs, RS-232, J1708 / J1587
- Approved for interior mounted applications only

Pressure Transducer
- 110 psi brake application pressure sensing capability
- Pneumatic connection – ¼" NPT male
- Material – stainless steel

Actuator Sensors
- Environmentally sealed optical sensor for Air-Disc actuators
- Environmentally sealed hall-effect sensor for S-Cam drum actuators
- Delphi Metri-Pack 150 sealed 3-pin connector
- 60 in [1.5m] standard harness length

Vehicle Wire Harnesses
- Power harness – 12 ft [3.7 meter] cut to length harness
- Pressure transducer harness – 5 ft [1.5 m] to 25 ft [7.6m]
- Sensor harness – 10 ft [3.0m] to 50 ft [15.2 m]
- All exterior cables cable jacketed and loomed

Driver Alert Options
- Alarm output(s) for in-cab warning function (lamp, buzzer, I/O connection)
- Fault code transmission via J1939
- Dash mounted e-DT diagnostic display interface

Brake Actuators
- e•STROKE® actuators are available for a wide range of vehicle applications. Contact MGM Brakes for available actuator options and sizes.

NOTE: Product information and specifications subject to change without notice. Refer to the MGM Brakes website for latest updated information.

e•STROKE® Diagnostics:

MGM's e•STROKE® system can be used in a variety of ways based on your fleet's needs. Brake status and diagnostic information can be accessed using three convenient methods:

- The e•DT™ hand held diagnostic tool
- Laptop diagnostic program
- Traditional warning light for immediate visual alert

The e•DT™ hand held diagnostic tool may be used to view the status of any e•STROKE® system connected to J1939 networks. In addition, the e•DT™ can view and clear fault history as well as display brake application pressure in real time. The e•DT™ tool plugs into the vehicle "OBD" (9 pin diagnostic port) with the supplied harness. Once plugged in, the tool will automatically link up to the e•STROKE® ECU and show the current brake status. A series of intuitive menus can be navigated using press buttons to access all of the brake information available in the ECU. The e•DT™ can also be permanently mounted in the cab as an "onboard" display where the operator can see the brake status clearly displayed in real time.

A laptop computer based diagnostic tool kit is also available for the e•STROKE® system. The kit includes the diagnostic software and appropriate harnesses for connection from the diagnostic computer to the e•STROKE® system (via RS-232 connection direct to the ECU or vehicle SAE J1939 network). This diagnostic software can be easily loaded on a laptop and connected to the e•STROKE® system. Brake status and history can be viewed and saved as a text record. In addition, the system configuration and serial numbers can be viewed. This kit allows the operator or technician to analyze this information in detail and save a record of the brake inspection. This enhances the systems usefulness as a prognostic and/or diagnostic tool.

Both the e•DT™ Tool and Diagnostic Laptop Program may be used to acquire the following information from the e•STROKE® ECU:

- Current wheel specific brake status (active faults)
- Stored fault history (in-active faults)
- e•STROKE® system & diagnostic status
- ECU information: software version, configuration, serial number is supported by the laptop program only.

The optional warning light will illuminate with active fault conditions and will also output diagnostic blink codes when prompted by pressing a button on the ECU. The e•STROKE® system can also be monitored via SAE J1939 network data by the vehicle's onboard computer system, AVM data logger or instrument cluster.

MGM e•STROKE® Diagnostic Tool Summary:

- P/N 9090109 kit connects the ECU to a standard laptop computer (customer supplied) via an RS-232 and/or serial connection.
- P/N 9090110 kit includes e-DT™ display tool and connects to the e•STROKE® system via a standard J1939 9-pin diagnostic connection.
- P/N 9090111 kit connects the laptop computer to the e•STROKE® system via a standard J1939 9-pin diagnostic connection. SAE J1939 250kbs Only.

NOTE: Product information and specifications subject to change without notice. Refer to the MGM Brakes website for latest updated information.

e-STROKE®

Electronic Brake Monitoring System

TRAINING AND SUPPORT

CLASSROOM TRAINING

TECHNICAL SUPPORT

e•STROKE® Training & Support Options Available:

Maintaining today's transit fleets while ensuring vehicles are operating safely and at optimum performance is a significant task and serious responsibility. MGM's e•STROKE® brake monitoring system (widely used across transit fleets) provides an excellent tool to monitor brake performance and ensure your vehicles are operating safely.

With ever tightening budgets, equipment constraints, and manpower availability, MGM understands the need for technical support and service when it comes to our brake products. This is why MGM is pleased to offer our "e•STROKE® Brake Monitor Technical Training Program" designed to assist your fleet in obtaining the maximum benefit from your e•STROKE® equipped vehicles.

Standard Program Training:

This training course gives your technicians a thorough understanding of the e•STROKE® system operation, interpreting diagnostic information, and system troubleshooting techniques. MGM will provide on-site classroom and hands on vehicle training. Some of the topics will include:

- Introduction to MGM Brakes and relevant actuator models
- Review of e•STROKE® functionality, components and system capabilities
- Description of e•STROKE® sensor technologies and how they specifically work
- e•STROKE® maintenance practices and service part replacement procedures
- Review of fault conditions and how to use the system to troubleshoot potential issues

Training Session Recommendations:

- Standard Training Sessions are approximately 4 hours long with 15 people max. 2.5 hours class room, 1.5 hours hands on. Up to 2 sessions per day may be scheduled.
- Custom training requirements and schedules can be coordinated with MGM approval.

MGM Brakes will provide the following:

- Classroom presentation.
- Hands on training with an e•STROKE® system and diagnostic tools.
- A digital copy of the e•STROKE® technical manual.
- Updates to existing MGM laptop diagnostic tool software. End user computer access rights may be needed at the time of software update.

The end user will need to provide:

- Class room with projector.
- Road worthy vehicle with e•STROKE® installed.
- Vehicle lift or inspection pit dedicated for the day of training.
- End user diagnostic tool(s) must be delivered prior to the training as they are used as part of the hands on training.

NOTE: Product information and specifications subject to change without notice. Refer to the MGM Brakes website for latest updated information.

e•STROKE® Technical Support Services:

Service and troubleshooting options are available for on-site assistance for diagnostic problems you may need assistance with or simply want the experience of one of our e•STROKE® Field Technicians to investigate. If your fleet is connected to an AVM system, MGM currently offers a monthly AVM monitoring package that will allow e•STROKE® engineers and technicians to monitor fault history for your fleets vehicles and alert you of problems as they are reported.

If you are already an e•STROKE® customer or simply want to keep up to date with the latest technological advances within the e•STROKE® product line, MGM Brakes offers ECU Firmware upgrades as well as entire system upgrades to keep your fleet current. The available packages include:

e•STROKE® AVM Monitoring Service:

- MGM staff will remotely monitor your AVM reports and provide Fleet Status monthly reports.
- MGM access to active AVM system is required.
- MGM will assist your technicians via telephone in identifying vehicles needing brake service and establishing severity levels for this service.

e•STROKE® System Diagnosis:

- Our technicians will assist your maintenance staff in analyzing brake monitor diagnostic information and provide recommendations for repair or replacement of defective components.

e•STROKE® ECU Firmware Upgrade:

- Our technicians will update your existing e•STROKE® ECU to the latest firmware revision upgrading the system functionality and ensuring optimal system monitoring.

e•STROKE® GEN 3 Upgrade:

- Our technicians will upgrade your current GEN 1 or GEN 2 e•STROKE® system to the latest GEN 3 technology and verify proper system operation.
- Service fee includes all parts required to upgrade system.
- Repair of issues found with existing system will be charged per hourly rate plus out of warranty parts.

Hourly Technical Services:

- Our technicians are available on an hourly basis as needed to assist your fleet maintenance staff with your e•STROKE® Brake Monitoring system needs.

NOTE: Product information and specifications subject to change without notice. Refer to the MGM Brakes website for latest updated information.

MGM Training and Technical Support Services Rate Schedule

- P/N 9595002 - e•STROKE® Brake Monitor Training Event (1 day, 2 sessions, 15 persons max per session)
- P/N 9595003 - Additional training sessions for scheduled training events (1 session) per session (Max 2 per day)
- P/N 9596001 - e•STROKE® daily technician support (on-site daily rate)
- P/N 9596002 - e•STROKE® ECU firmware upgrade (per vehicle, update ECU)
- P/N 9596003 - e•STROKE® GEN 3 upgrade (per vehicle, replace ECU, transducer)
- P/N 9496004 - e•STROKE® AVM report monitoring (monthly fee)
- e•STROKE® technical phone support ..... Free of charge

* Plus applicable travel expenses (mileage or airfare, lodging, meals) billed at actual rates

Contact your local MGM Sales Representative or call 1-800-527-1534 ext.1230 to obtain complete pricing and to schedule a MGM technician for an on-site consultation.

NOTE: Product information and specifications subject to change without notice. Refer to the MGM Brakes website for latest updated information.

ECU POWER & AUXILIARY CABLES					
SYSTEM TYPE	DESCRIPTION	P/N	REPLACES P/N	LENGTH FT [M]	FUNCTION
GEN 3	Power Harness	8290233	N/A	12 ft [3.7m]	Connects GEN 3 ECU to Power, J1708, Alarm 1 & 2
	SAE J1939 Drop Leg Harness, Receptacle	8290218	N/A	1.5 ft [0.5 m]	Deutsch Receptical-A-DT04-3P-E008 Connector, Wedge-A-W3P
	SAE J1939 Drop Leg Harness, Plug	8290257	N/A	3 ft [0.9 m]	Deutsch Plug-A-DT06-3S-E008 Connector, Wedge-A-W3S
	SAE J1939 Backbone Extension	8290274	N/A	1 ft [0.3 m]	Deutsch DT06-3S-E008 Connector, Wedge-A-W3S-1939, DT04-P-P007
	Warning Light Harness Kit, Amber	9090105	N/A	6 ft [1.8 m]	0.5" Panel Mount Warning Light w/ Harness & Label Kit, Amber
		9090106	N/A	12 ft [3.7 m]	0.5" Panel Mount Warning Light w/ Harness & Label Kit, Amber

ACTUATOR SENSORS & HARNESSES					
SYSTEM TYPE	DESCRIPTION	P/N	REPLACES P/N	LENGTH FT [M]	FUNCTION
GEN 1 & 2	Drum Brake Actuator Sensor	8290116	N/A	2.5 ft [0.76 m]	Shorter version of 8290120 sensor
GEN 2 & GEN 3 Drum		8290120	8290116	5 ft [1.5 m]	All e•STROKE® Drum Applications
GEN 3 Disc	Disc Brake Actuator Sensor	8290360	8290350	5 ft [1.5 m]	Most e•STROKE® GEN 3 Disc Applications
		8290363	8290353	9 ft [2.7 m]	Used for NOVA Bus Steer Axle e-Stroke GEN 3 Disc Applications
GEN 3	Sensor Harness	8290260	N/A	10 ft [3.0 m]	Connects Drum or Disc Sensor to GEN 3 ECU
		8290261	N/A	15 ft [4.6 m]	
		8290262	N/A	20 ft [6.1 m]	
		8290263	N/A	25 ft [7.6 m]	
		8290264	N/A	30 ft [9.1 m]	
		8290265	N/A	35 ft [10.7 m]	
		8290266	N/A	40 ft [12.2 m]	
		8290267	N/A	45 ft [13.7 m]	
		8290311	N/A	50 ft [15.2 m]	
	Sensor Harness Connector Kit	9090118	N/A	N/A	Kit includes parts needed to replace GEN 3 Molex ECU Connector
GEN 1, 2 & 3	Sensor Extension Harness	8290253	N/A	11 ft [3.4 m]	Used to extend sensor harness at wheel end.

NOTE: Product information and specifications subject to change without notice. Refer to the MGM Brakes website for latest updated information.

PRESSURE TRANSDUCERS & HARNESSES					
SYSTEM TYPE	DESCRIPTION	P/N	REPLACES P/N	LENGTH FT [M]	FUNCTION
GEN 2	Pressure Transducer, 50 psi (3.4 bar)	8090075	N/A	N/A	e•STROKE® GEN 2 Legacy Systems
GEN 3	Pressure Transducer, 100 psi (6.9 bar)	8090550		N/A	All e•STROKE® GEN 3 Systems
	Pressure Transducer Harness	8290243		5 ft [1.5 m]	Connects P/N 8090550 Pressure Transducer to GEN 3 ECU
		8290244		10 ft [3.0 m]	
		8290245		15 ft [4.6 m]	
		8290246		20 ft [6.1 m]	
		8290310		25 ft [7.6 m]	
GEN 2 & 3	Fitting, 1/4" NPT Brass Hex Nipple	8160038	N/A	N/A	Used for Pressure Transducer Installation
	Fitting, 1/4" NPT Brass Tee	8160040		N/A	

NOTE: Product information and specifications subject to change without notice. Refer to the MGM Brakes website for latest updated information.

E-STROKE® GEN 3 ECU'S							
SYSTEM TYPE	DESCRIPTION	P/N	SAE J1939	AXLE 1	AXLE 2	AXLE 3	AXLE 4
GEN 3 - Drum	ECU - Truck/Bus	8291100	250 kbs	Drum & Lining Wear Sensors			
		8291101		Drum Sensor			
		8291102		Drum Sensor			
		8291103		Drum & Lining Wear Sensors			
		8291108		Drum Sensor			
		8291109		Drum & Lining Wear Sensors			
		8291126	500 kbs	Drum Sensor			
	ECU - Tractor	8291104	250 kbs	Drum Sensor			
		8291105		Length ft [m]			
		8291106		Drum Sensor			
		8291107		Drum & Lining Wear Sensors			
		8291110		Drum Sensor			
		8291111		Drum & Lining Wear Sensors			
GEN 3 - Disc	ECU - Tractor/Truck/Bus	8291117	250 kbs	Disc Sensor			
		8291118		Disc & Lining Wear Sensors			
		8291119		Disc Sensor			
		8291120		Disc & Lining Wear Sensors			
		8291121		Disc Sensor	Drum Sensor		
		8291123	500 kbs	Disc Sensor			
		8291124		Disc Sensor			
		8291125		Disc Sensor	Drum Sensor		
		8291127		Disc Sensor	Drum Sensor		
		8291128		Disc & Lining Wear Sensors			

E-STROKE® GEN 1 & 2 ECU REPLACEMENT SERVICE KITS						
SYSTEM TYPE	DESCRIPTION	P/N	REPLACED BY P/N	AXLE 1	AXLE 2	AXLE 3
GEN 1	ECU Service Kit - Truck/Bus	8290106	9090116	Drum Sensor		
		9090114		Drum Sensor		
GEN 2	ECU Service Kit - Truck/Bus	8290110	9090117	Drum Sensor		
GEN 1 & 2	ECU Service Kit - Tractor/Truck/Bus	8290103	9090120	Drum Sensor		
		8290105		Drum Sensor		
		8290113		Drum Sensor		
		8290115		Drum Sensor		
GEN 1	ECU - Trailer	8290034	Discontinued	Drum Sensor		
		8290035	Discontinued	Drum Sensor		
		8290036	Discontinued	Drum Sensor		

NOTE: Product information and specifications subject to change without notice. Refer to the MGM Brakes website for latest updated information.

E•STROKE® DIAGNOSTIC TOOLS					
SYSTEM TYPE	DESCRIPTION	P/N	SAE J1939/ LENGTH	INCLUDED WITH KIT P/N	DESCRIPTION
GEN 3 - Disc & Drum	Laptop Diagnostic Kit - Direct ECU Connection (RS-232)	9090109	250 kbs & 500 kbs	N/A	Kit includes software and harnesses for use with shop laptop. Carry case included
	Laptop Diagnostic Kit - Vehicle J1939 OBD Port Connection	9090111	250 kbs Only	N/A	Kit includes software and harnesses for use with shop laptop. Carry case included.
	e-DT™ Diagnostic Display Kit - Vehicle J1939 OBD Port Connection	9090110	250 kbs & 500 kbs	N/A	Kit includes diagnostic display and harnesses and carrycase
GEN 3 - Disc & Drum	e•STROKE® Tech Manual & Diagnostic Software USB Jump Drive	8090091	N/A	9090109, 9090110, 9090111	"Includes complete e•STROKE® Technical Manual and 9090109, 9090111 diagnostic laptop software"
	Diagnostic Tool Case	8290561	N/A	9090109, 9090110, 9090111	Used for all diagnostic kit options
	Laptop Diagnostic Harness, RS-232, 10'	8290220	10' [3.0 m]	9090109	Connects laptop serial connector to GEN 3 ECU P2 connector
	RS-232 to USB Adapter Module/Harness	8090090	N/A	9090109	Adapts laptop USB to RS-232 serial connector
	e•DT™ Diagnostic Display	8290240	N/A	9090110	Diagnostic Display Unit
	e•DT™ Diagnostic Harness, SAE J1939	8290302	3' [1.0 m]	9090110	"Connects e-DT™ display to vehicle 9-Pin OBD connector. Replaces P/N 8290224."
	SAE J1939 Network Adapter Harness	8290239	N/A	9090110, 9090111	Adapts secondary SAE J1939 CAN network on select vehicles. Used on many New Flyer and MCI applications.
	Laptop Diagnostic Harness, SAE J1939, 10'	8290304	10' [3.0 m]	9090111	Connects laptop to vehicle 9-Pin OBD connector with 8090097 adapter
	SAE J1939 to USB Adapter Module/Harness	8090097	N/A	9090111	Works with 8290304 harness. USB to CAN adapter

NOTE: Product information and specifications subject to change without notice. Refer to the MGM Brakes website for latest updated information.

REPLACEMENT PARTS

Original-Equipment Quality - Satisfaction Guaranteed

Page(s)

Section 9: Replacement Parts 132-139

Kits - Breather Cap, End Cap & Weatherseal™ Plug 134

Diaphragms, Kit - Release Bolts, Clamp Bands 134

Kits - S-Cam Protective Boots & Center Hole Shield, Kits - Breather Tube & Elbow 135

Kits - Nuts and Washers 135

Non-Pressure Chamber (With and Without Breather Elbow), Vent Hole - Plug 135

Welded Yoke Assemblies 136

Welded Yoke Assemblies (continued), Yoke Pins (Stainless Steel) 137

Yoke Assemblies - 2 Pin, Yoke Assemblies 138

Push-Rod Assembly and Nut Kits 139

NOTE: All parts except push-rod assemblies and non-pressure housings are packaged (on a card) or bulk packed in a box. Packaged parts are designated with a "P" suffix and bulk parts are designated with an "X" suffix. See price list for quantity details.

NOTE: Product information and specifications subject to change without notice. Refer to the MGM Brakes website for latest updated information.

End Caps & Weatherseal™ Plug Kits

VMRS 013-004-040

Key	P/N	Description	Used on MGM Models/Sizes
1	9019005	Kit - Weatherseal™ Plug	ALL TR, TR-T, TR-TS sizes except 3036 & 3636
1	9019006	Kit - Weatherseal™ Plug	TR, TR-T, TR-TS sizes, 3036, 3636

Diaphragms

VMRS 013-004-007

Type	Stroke	P/N	Material	Outside Diameter
9	1.75" (44.5 mm)	8017109	R	5.00" (127.0 mm)
12	1.75" (44.5 mm)	8017112	R	5.50" (139.7 mm)
12	1.75" (44.5 mm)	8017312*	R	5.50" (139.7 mm)
16	2.25" (57.2 mm)	8017116	R	6.00" (152.4 mm)
20	2.25" (57.2 mm)	8017120	R	6.50" (165.1 mm)
20	2.25" (57.2 mm)	8017145	N	6.50" (165.1 mm)
30	2.50" (63.5 mm)	8017730**	R	8.00" (203.2 mm)
30	2.50" (63.5 mm)	8017731**	N	8.00" (203.2 mm)
36	3.00" (76.2 mm)	8017836**	R	9.00" (228.6 mm)
36	3.00" (76.2 mm)	8017840*	R	9.00" (228.6 mm)
16L	2.50" (63.5 mm)	8017216	R	6.00" (152.4 mm)
16LH	2.50" (63.5 mm)	8017215*	R	6.50" (165.1 mm)
20HL3	3.00" (76.2 mm)	8017226	R	7.00" (177.8 mm)
20L	2.50" (63.5 mm)	8017220	R	6.50" (165.1 mm)
20L3	3.00" (76.2 mm)	8017820*	R	6.50" (165.1 mm)
24L	2.50" (63.5 mm)	8017141	R	7.00" (177.8 mm)
24L	2.50" (63.5 mm)	8017224	N	7.00" (177.8 mm)
24L3	3.00" (76.2 mm)	8017425	N	7.00" (177.8 mm)
24L3	3.00" (76.2 mm)	8017924	R	7.00" (177.8 mm)
24L3	3.00" (76.2 mm)	8017926*	R	7.00" (177.8 mm)
30L3	3.00" (76.2 mm)	8017830**	R	8.00" (203.2 mm)
30L3	3.00" (76.2 mm)	8017831**	N	8.00" (203.2 mm)
30L3	3.00" (76.2 mm)	8017838*	R	8.00" (203.2 mm)
36	3.00" (76.2 mm)	8017036	N	9.00" (228.6 mm)

Kit - Release Bolt VMRS 013-004-006

P/N	Services MGM Brakes Model Sizes
9007003	All TR Models except 3036, 3636 - 4 7/8"
9007009	TR3036, TR3636 - 6 1/2"

Clamp Bands

VMRS 013-004-029

Type	P/N (1 Piece)	P/N (2 Piece)
9	8216009	N/A
12	8216012	N/A
16	8216016	8216018
20	8216022	8216020
24	9016024	8216025
30	9016030	8216045
36	N/A	8216036

NOTE: All clamps furnished with nuts and bolts.

NOTE: (1) Material "R" is natural rubber blend with nylon fabric reinforcement.
Use only "R" type diaphragms in extreme cold weather climates. Good to -40° F (-40° C).
(2) Material "N" is neoprene blend with nylon fabric reinforcement.
(*) For use in J - Series models only.
(**) Easy Fit Design

NOTE: Product information and specifications subject to change without notice. Refer to the MGM Brakes website for latest updated information.

S-Cam Protective Boots — VMRS 013-004-031

Key	P/N	Description
1	9004001	Boot & Retainer S-Cam
2	9004002	Boot & Retainer S-Cam
3	8004009	Boot - 1.625" (41.3 mm) Center-Hole

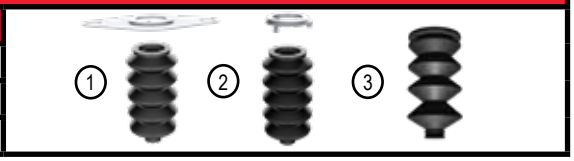

NOTE: (1) MGM P/N 9004001 Kit can only be used with non-pressure chambers (mounting housings) having a diamond shaped NPC.
(2) MGM P/N 9004002 Kit can only be used with MGM Brakes type 20, 24 & 30 non-pressure chambers (mounting housings) with flat bottoms having 3 equally spaced installation holes for the plastic boot retainer.
(3) MGM P/N 8004009 is suitable for MGM Brakes type 20, 24, 30 & 36 non-pressure chambers with 1.625" (41.3 mm) center hole and 5/8" (15.9 mm) rod only.

Kit - Center Hole Shield

9065002	Kit - Center Hole Shield

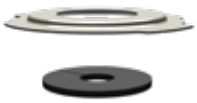

NOTE: MGM P/N 9065002 Kit is suitable only for MGM Brakes type 20, 24, 30 & 36 non-pressure chambers. Field installation requires complete disassembly of the service brake chamber.

Kit - Wedge Chamber Boot

9004005	Kit - Wedge Chamber Boot

Breather Tube & Elbow Kit — VMRS 013-004-044

Key	P/N	Service MGM Brakes Model
1	9081001	All MGM Brakes model sizes fitted with breather tube.
2	9081007	MJW1624BT
--	9081005	Breather Tube Extension Kit (not shown)

Kit - Nuts & Washers (NPC Mounting)

VMRS 013-004-006

P/N 9002001	Type 20, 24, 30 & 36
P/N 9002002	M16 - Type 20, 24, 30 & 36
P/N 9002003	Type 12 and 16

Non-Pressure Chamber (with breather tube elbow)

VMRS 013-004-030

Type	P/N SAE
20	9015110
20L3H	9015213
20L3	9015238
24L*	9015151
24L3	9015213
30	9015122
30**	9015259
36	9015108

Non-Pressure Chamber (Without breather tube elbow)

VMRS 013-004-030

Type	P/N SAE
12	8215142
16	8215023
16L 2.5	8215023
20	8215169
24L*	8215026
24L3	8215200
30	8215501
30**	9015260
36	8215036

NOTE: Applies to NPC chambers w/breather elbow and w/o breather elbow.
(*) These chamber sizes are heavy-duty weld-reinforced.
(**) 8-gauge, weld reinforced.

Vent Hole - Plug

P/N 8019021

NOTE: Do not plug more than 3 holes in the service chamber (NPC) and never plug any hole facing the road surface or positioned at the lowest point.

NOTE: Product information and specifications subject to change without notice. Refer to the MGM Brakes website for latest updated information.

Welded Yoke Assemblies

VMRS 013-004-018

CAUTION: WELDED YOKE PISTON RODS SHOULD ONLY BE USED IN CONJUNCTION WITH MGM NON-PRESSURE CHAMBER.

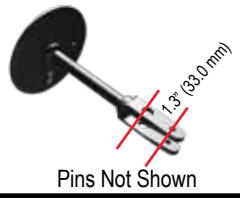

Pins Not Shown

P/N	Y - Dim	Kit - NP Chamber Assembly	Kit - Push-Rod/Welded Yoke	Kit - NP Chamber
1427901	2.25" (57.2 mm)	9015907	9075003	8215853
1427902	2.25" (57.2 mm)	9015907	9075003	8215853
1428901	2.25" (57.2 mm)	9015903	9075002	8215250
1428902	2.25" (57.2 mm)	9015903	9075002	8215250
1430901	2.25" (57.2 mm)	9015908	9075004	8215501
1430902	2.25" (57.2 mm)	9015908	9075004	8215501
1431901	2.25" (57.2 mm)	9015904	9075001	8215501
3220951	2.25" (57.2 mm)	9015909	9075005	8215250
3224951	2.25" (57.2 mm)	9015903	9075002	8215250
3225951	2.25" (57.2 mm)	9015901	9075002	9015213
3226951	2.25" (57.2 mm)	9015903	9075002	8215250
3227951	2.25" (57.2 mm)	9015901	9075002	9015213
3230951	2.25" (57.2 mm)	9015904	9075001	8215501
3230955	3.0625" (77.8 mm)	9015919	9075011	8215501
3230957	11.10" (281.9 mm)	9015273	9075029	8215501
3231951	2.25" (57.2 mm)	9015902	9075001	9015216
3231953	2.25" (57.2 mm)	9015902	9075001	9015216
3231954	2.87" (72.9 mm)	9015269	9075012	9015216
3231955	2.87" (72.9 mm)	9015269	9075012	9015216
3232951	2.25" (57.2 mm)	9015904	9075001	8215501
3232952	2.25" (57.2 mm)	9015904	9075001	8215501
3233951	2.25" (57.2 mm)	9015902	9075001	9015216
3233952	2.25" (57.2 mm)	9015902	9075001	9015216
3233953	4.20" (106.7 mm)	9015268	9075013	9015216
3234951	2.25" (57.2 mm)	9015906	9075001	9015260
3235951	2.25" (57.2 mm)	9015905	9075001	9015259
3244951	2.25" (57.2 mm)	9015905	9075001	9015259
3235954	4.20" (106.7 mm)	9015140	9075022	9015259
3235955	2.87 (72.9 mm)	9015141	9075023	9015259
3430951	2.25" (57.2 mm)	9015908	9075004	8215501
3430952	4.20" (106.7 mm)	9015916	9075009	8215501
3430955	3.0625" (77.8 mm)	9015918	9075010	8215501
3430957	11.10" (281.9 mm)	9015274	9075030	8215501
3431951	2.25" (57.2 mm)	9015911	9075004	9015216
3431952	4.20" (106.7 mm)	9015917	9075009	9015216
3431953	2.25" (57.2 mm)	9015911	9075004	9015216
3431954	4.20" (106.7 mm)	9015917	9075009	9015216
3431955	2.87" (72.9 mm)	9015266	9075014	9015216
3431956	2.87" (72.9 mm)	9015267	9075015	9015216

NOTE: Product information and specifications subject to change without notice. Refer to the MGM Brakes website for latest updated information.

Welded Yoke Assemblies

VMRS 013-004-018

CAUTION: WELDED YOKE PISTON RODS SHOULD ONLY BE USED IN CONJUNCTION WITH MGM NON-PRESSURE CHAMBER.

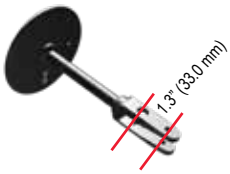

Pins Not Shown

P/N	Y - Dim	Kit - NP Chamber Assembly	Kit - Push-Rod/Welded Yoke	Kit - NP Chamber
3432951	2.25" (57.2 mm)	9015911	9075004	9015216
3433951	2.25" (57.2 mm)	9015908	9075004	9015501
3436951	2.25" (57.2 mm)	9015914	9075007	9015262
3437951	2.25" (57.2 mm)	9015915	9075007	9015263
3523951	2.25" (57.2 mm)	9015901	9075002	9015213
3527951	2.25" (57.2 mm)	9015901	9075002	9015213
3531951	2.25" (57.2 mm)	9015911	9075004	9015216
3531952	4.20" (106.7 mm)	9015917	9075009	9015216
3532951	2.25" (57.2 mm)	9015911	9075004	9015216
3532952	4.20" (106.7 mm)	9015917	9075009	9015216
3532953	4.20" (106.7 mm)	9015917	9075009	9015216
3532954	2.25" (57.2 mm)	9015911	9075004	9015216
3534951	2.25" (57.2 mm)	9015902	9075001	9015216
3535951	2.25" (57.2 mm)	9015902	9075001	9015216
3545951	2.25" (57.2 mm)	9015270	9075006	9015259
3624951	2.25" (57.2 mm)	9015265	9075016	9015264
3625951	2.25" (57.2 mm)	9015912	9075003	9015261
3631951	2.25" (57.2 mm)	9015911	9075004	9015216
3828951	2.25" (57.2 mm)	9015903	9075002	8215250
3631951	2.25" (57.2 mm)	9015911	9075004	9015216
3828951	2.25" (57.2 mm)	9015903	9075002	8215250
3832951	2.25" (57.2 mm)	9015904	9075001	8215501
3833951	2.25" (57.2 mm)	9015902	9075001	9015216
3833953	11.10" (281.9 mm)	9015275	9075031	9015216
3844951	2.25" (57.2 mm)	9015906	9075001	9015260
MJS3024ET951	2.25" (57.2 mm)	9015910	9075006	9015216
MJS3028ET951	2.25" (57.2 mm)	9015902	9075001	9015216
MJS3030ET951	2.25" (57.2 mm)	9015902	9075001	9015216
MJS3630ET951	2.25" (57.2 mm)	9015913	9075008	9015262

NOTE: Product information and specifications subject to change without notice. Refer to the MGM Brakes website for latest updated information.

Yoke Assemblies - 2 Pin — VMRS 013-004-026

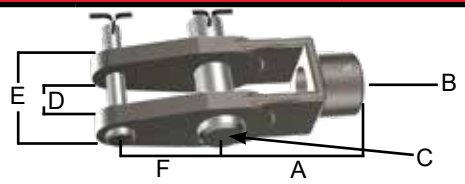

P/N	A	B	C	D	E	F
8292031	1.96” (49.8 mm)	5/8” x 18 UNF	1/2” (12.7 mm)	.59” (15.0 mm)	1 1/10” (27.9 mm)	1.30” (33.0 mm)

Yoke Assemblies — VMRS 013-004-026

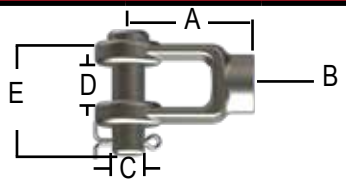

P/N	A	B	C	D	E
8292001	1.88” (47.8 mm)	5/8” - 18 UNF	1/2” (12.7 mm)	9/16” (14.3 mm)	1 11/16” (42.9 mm)
8292002	1.88” (47.8 mm)	5/8” - 18 UNF	5/8” (15.9 mm)	9/16” (14.3 mm)	1 11/16” (42.9 mm)
8292003	1.88” (47.8 mm)	1/2” - 20 UNF	1/2” (12.7 mm)	9/16” (14.3 mm)	1 11/16” (42.9 mm)
8292007	2.31” (58.7 mm)	3/4” - 16 UNF	1/2” (12.7 mm)	11/16” (17.5 mm)	1 13/16” (46.0 mm)
8292008	2.31” (58.7 mm)	3/4” - 16 UNF	5/8” (15.9 mm)	11/16” (17.5 mm)	1 13/16” (46.0 mm)
8292009*	1.88” (47.8 mm)	5/8” - 18 UNF	1/2” (12.7 mm)	9/16” (14.3 mm)	1 11/16” (42.9 mm)
8292010	1.88” (47.8 mm)	1/2” - 20 UNF	5/8” (15.9 mm)	9/16” (14.3 mm)	1 11/16” (42.9 mm)
8292011*	1.88” (47.8 mm)	5/8” - 18 UNF	5/8” (15.9 mm)	9/16” (14.3 mm)	1 11/16” (42.9 mm)
8292012	1.88” (47.8 mm)	M16 x 1.5-6h	14 mm	14 mm	1 11/16” (42.9 mm)
8292014	2.31” (58.7 mm)	3/4” - 16 UNF	14mm	11/16” (17.5 mm)	1 11/16” (42.9 mm)
8292016	1.88” (47.8 mm)	M16 x 1.5-6h	1/2” (12.7 mm)	9/16” (14.3 mm)	1 11/16” (42.9 mm)
8292017	2.83” (71.9 mm)	5/8” - 18 UNF	1/2” (12.7 mm)	9/16” (14.3 mm)	1 11/16” (42.9 mm)
8292018	2.83” (71.9 mm)	5/8” - 18 UNF	5/8” (15.9 mm)	9/16” (14.3 mm)	1 11/16” (42.9 mm)
8292019	2.83” (71.9 mm)	M16 x 1.5 - 6h	14mm	9/16” (14.3 mm)	1 11/16” (42.9 mm)
8292020	1.88” (47.8 mm)	5/8” - 18 UNF	14 mm	9/16” (14.3 mm)	1 11/16” (42.9 mm)
8292022	2.20” (55.9 mm)	M16 x 1.5 - 6h	14 mm	37/64” (14.7 mm)	1 11/16” (42.9 mm)
8292023*	1.88” (47.8 mm)	5/8” - 18 UNF	14 mm	9/16” (14.3 mm)	1 3/4” (44.5 mm)
8292026	2.28” (57.9 mm)	5/8” - 18 UNF	5/8” (15.9 mm)	13/16” (20.6 mm)	1 3/4” (44.5 mm)
8292028	1.88” (47.8 mm)	M10 x 1.0-6h	1/2” (12.7 mm)	9/16” (14.3 mm)	1 11/16” (42.9 mm)
8292029	1.88” (47.8 mm)	1/2” x 20 UNF	14 mm	9/16” (14.3 mm)	1 19/64” (32.9 mm)
8292030	1.88” (47.8 mm)	5/8” - 18 UNF	14 mm	9/16” (14.3 mm)	1 19/64” (32.9 mm)

Note: (*) Stainless steel pin: 1/2” (12.7 mm) dim. 8038007, 5/8” (15.9 mm) dim. 8038008, see other stainless steel pins.

NOTE: Product information and specifications subject to change without notice. Refer to the MGM Brakes website for latest updated information.

Yoke Pins (Stainless Steel) VMRS 013-004-026		
P/N	Diameter	Application
8038007	1/2" (12.7 mm)	Threaded Yoke
8038008	5/8" (15.9 mm)	Threaded Yoke
8038012	1/2" (12.7 mm)	Welded Yoke
8038014	14mm	Threaded Yoke
8038016	1/4" (6.4 mm)	Welded Yoke
8038017	1/2" (12.7 mm)	Threaded Yoke
8038019	1/4" (6.4 mm)	Threaded Yoke

Push-Rod Assembly & Nut Kits			
VMRS 013-004-013	Type	P/N SAE	P/N METRIC
	12*	9064018	N/A
	12*	9064010	N/A
	16	9064019	N/A
	20	9064001	9064015
	20L3	9064026**	9064036
	24L	9064002	9064016
	24L3	9064006**	9064027
	30	9064003	9064035
	30L3	9064008**	9064028
	36	9064004	9064009

NOTE: (*) Type 12 (p/n 9064018) has a 4" threaded rod, type 12 (p/n 9064010) has an 8" threaded rod.

NOTE: Type 12 and 16 push-rods will provide approximately 4.00" (101.6 mm) X-dimension when installed with 4.00" (101.6 mm) of 1/2"-20 UNF threads.

NOTE: Type 20 through 36 push-rods will provide approximately 8.00" (203.2 mm) X-dimension when installed with 8.00" (203.2 mm) of 5/8"-18 UNF threads.

NOTE: These assemblies have MGM Brakes "Stroke Alert" markings and must be used only on the designated MGM Brakes units.

NOTE: (**) These assemblies to be used in conjunction with MGM 3-inch (76.2 mm) long stroke units only.

NOTE: Product information and specifications subject to change without notice. Refer to the MGM Brakes website for latest updated information.

TECHNICAL INFORMATION

Important Procedures & Detailed Tech Information

Page(s)

Section 10: Technical Information 140-165

MJS Service Diaphragms - Replacement 142

Product Identification Plate 143

Long Stroke Identification 144

Double - Diaphragm to Piston Conversion Chart 145

Procedure to Cut a Push-Rod 146

Proper Brake Adjustment 147

Fastener Torque Value Chart 148

Procedure to Lengthen External Breather Tube 149

Mixing Standard and Long Stroke Chambers 150

Field Replacement - Service Consideration for Brake Actuators with Welded Yokes 151

Performance Chart - Spring Brake Chambers (including Remote Mount Cylinders) - SAE 152

Performance Chart - Service Brake Chambers - SAE 153-158

Performance Chart - Spring Brake Chambers (including Remote Mount Cylinders) - METRIC 159

Performance Chart - Service Brake Chambers - METRIC 160-165

NOTE: Product information and specifications subject to change without notice. Refer to the MGM Brakes website for latest updated information.

This bulletin is to notify customers of the availability of “reinforced” diaphragms for use in MJ model actuators with spring brake parking force output in excess of 2300 lbs [10.2 kN] at 1.25 in [31.75 mm] of stroke (i.e. MJSxx28 and xx30).

Due to the high force output provided by the power spring in MJSxx28 and MJSxx30 model actuators, the surface of the service chamber diaphragm, where the “center-case” push-rod and diaphragm make contact, may chafe or wear affecting the long-term durability of the diaphragm. MGM Brakes developed a reinforced diaphragm design with an extra layer of fabric covering the center area of the diaphragm where the center push-rod makes contact with the diaphragm.

MGM recommends using only MGM “reinforced” diaphragms for replacement in these MJ models. Reference the Replacement Parts section of this catalog for recommended MJ model diaphragms. All diaphragms are available from MGM Brakes in both single piece and bulk packs.

Unit Serial Numbers

Starting March 2012, MGM Brakes introduced the serialization of brake chambers for improved identification and traceability. This number is a randomly generated seven digit numeric number that is unique to each MGM Brake unit.

The serial number is located with the product identification (see illustration) that is either stamped directly on the unit, or stamped on a tag that is affixed to the unit.

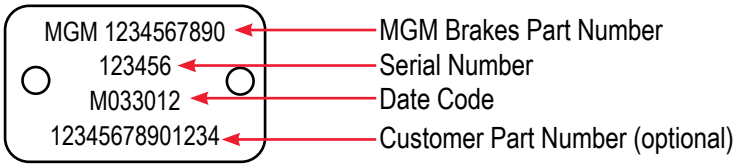

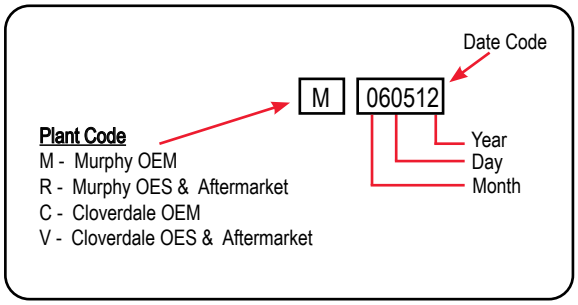

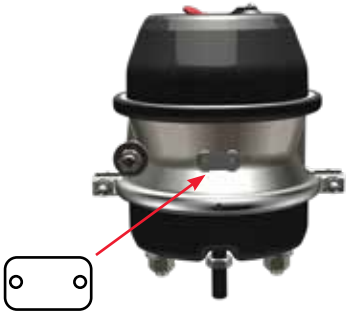

Double Diaphragm
TR Model

Long Life
Double Diaphragm
LTR/LTS Model

Piston
Magnum Performance Plus Model
MJS Model

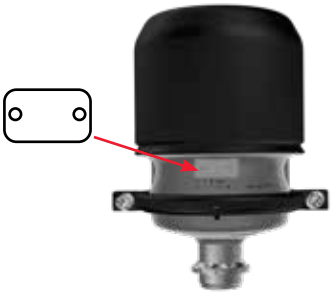

Wedge
MJW Model

Remote Cylinder

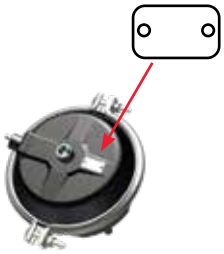

S - Cam Service
C and CS Models

NOTE: Product information and specifications subject to change without notice. Refer to the MGM Brakes website for latest updated information.

"LONG STROKE"
SPRING BRAKE ACTUATOR IDENTIFICATION

Trapezoidal shaped stroke ID tag secured to the service clamp band indicates long stroke.

Servicing instructions are embossed into the flange case for when diaphragm replacement is required.

SAE J2899 rated stroke code letter marking located near the air ports on the flange case

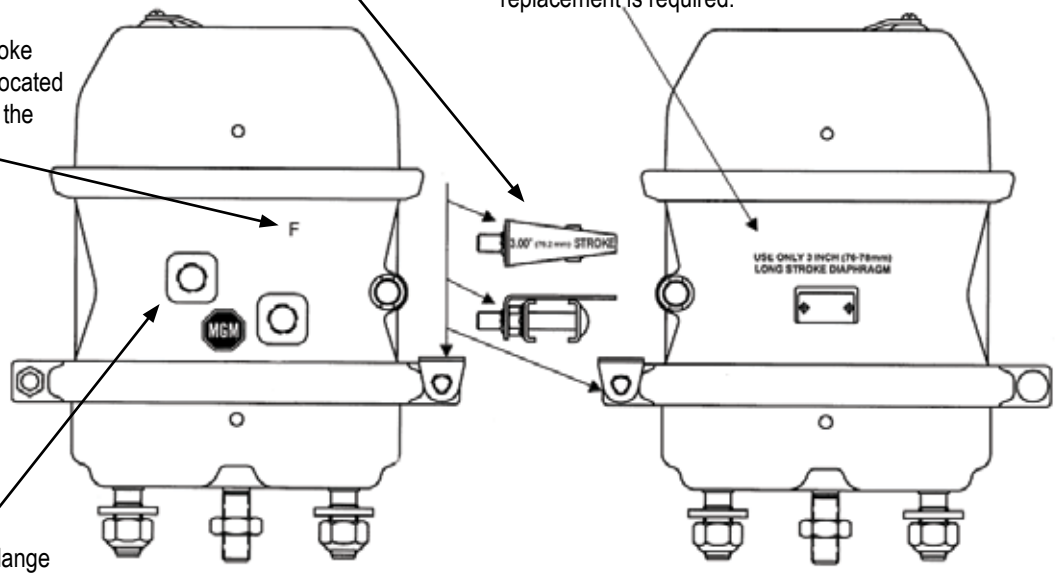

Square air port flange case casting indicates long stroke.

"LONG STROKE"
SERVICE CHAMBER IDENTIFICATION

Servicing instructions are stamped into the pressure cap for when diaphragm replacement is required.

Square air port embossment on top of pressure cap indicates long stroke.

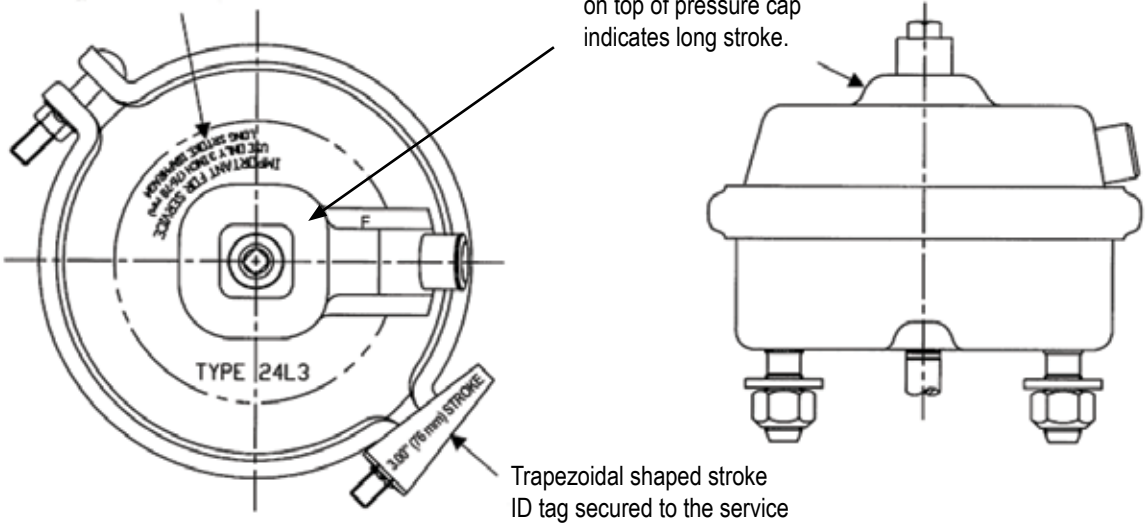

Trapezoidal shaped stroke ID tag secured to the service clamp band indicates long stroke.

NOTE: Product information and specifications subject to change without notice. Refer to the MGM Brakes website for latest updated information.

The following information provides guidance for replacing double diaphragm actuators with MJ model piston type brake actuators.

CAUTION: The recommended MJ model replacement may have more parking force than the double diaphragm model it is replacing. An anti-compounding valve may be required to prevent excess braking force.

NOTE:
The MJ models listed on the chart below are 3 in [76.2 mm] stroke actuators. Ensure that installations have proper clearance for 3 inches [76.2 mm] of stroke.

MGM Brakes recommends replacing both actuators on an axle if the force and/or stroke is different from the actuator being replaced.

Model numbers for double diaphragm actuators describe the chamber size based on the diaphragm effective area. A model TR2430 describes a type 24 service chamber diaphragm and a type 30 spring chamber diaphragm. Model numbers for piston type actuators describe the typical service chamber diaphragm size but differ in the parking chamber size specification. Piston actuator parking chamber size is defined by the equivalent parking force output.

Model Size	Stroke Inches (mm)	Parking Force (B) lbs (kN)	Hold - Off Pressure (A) psi (bar)	MJS1722	MJS2022	MJS2422	MJS3022	MJS1724	MJS2024	MJS2424	MJS3024	MJS2028	MJS2428	MJS3028	MJS3628	MJS2030	MJS2430	MJS3030	MJS3630
				1725 lbs (7.7 kN)				1922 lbs (8.5 kN)				2320 lbs (10.3 kN)				2450 lbs (10.9 kN)			
				63 psi (4.4 bar)				71 psi (4.9 bar)				73 psi (5.0 bar)				75 psi (5.2 bar)			
TR2430HD	2.50" (63.5 mm)	1580 lbs. (7.0 kN)	64 psi (4.4 bar)							■									
TR3030HD	2.50" (63.5 mm)	1580 lbs. (7.0 kN)	64 psi (4.4 bar)								■								
TR2430	3.00" (76.2 mm)	1435 lbs. (6.4 kN)	63 psi (4.3 bar)			■													
TR2430HD	3.00" (76.2 mm)	1580 lbs. (7.0 kN)	68 psi (4.7 bar)							■									
TR3030	3.00" (76.2 mm)	1435 lbs. (6.4 kN)	63 psi (4.3 bar)				■												
TR3030HD	3.00" (76.2 mm)	1580 lbs. (7.0 kN)	68 psi (4.7 bar)								■								
TR3036	2.50" (63.5 mm)	1960 lbs. (8.7 kN)	66 psi (4.6 bar)											■					
TR3636	3.00" (76.2 mm)	1960 lbs. (8.7 kN)	68 psi (4.7 bar)												■				
LTR2430	3.00" (76.2 mm)	1525 lbs. (6.8 kN)	71 psi (4.7 bar)							■									
LTR3030	3.00" (76.2 mm)	1525 lbs. (6.8 kN)	71 psi (4.7 bar)								■								
LTS3030ET	3.00 (76.2 mm)	1607 lbs. (7.1 kN)	68 psi (4.7 bar)								■								
M1620LG - T	2.50" (63.5 mm)	1410 lbs. (6.3 kN)	50 psi (3.4 bar)	■															
M1624LG - T	2.50" (63.5 mm)	1625 lbs. (7.2 kN)	56.8 psi (4.1 bar)		■														
M2020LG - T	2.50" (63.5 mm)	1410 lbs. (6.3 kN)	50 psi (3.4 bar)		■														
M2024LG - T	2.50" (63.5 mm)	1625 lbs. (7.2 kN)	50 psi (4.1 bar)						■										
M2030LG - T	2.50" (63.5 mm)	2360 lbs. (10.5 kN)	58.2 psi (4.0 bar)													■			
M2420LG - T	2.50" (63.5 mm)	1410 lbs. (6.3 kN)	50 psi (3.4 bar)			■													
M2424LG - T	2.50" (63.5 mm)	1625 lbs. (7.2 kN)	50 psi (4.1 bar)							■									
M2430LG - T	2.50" (63.5 mm)	2360 lbs. (10.5 kN)	68 psi (4.7 bar)														■		
M3024GT	2.50" (63.5 mm)	1625 lbs (7.2 kN)	60 psi (4.1 bar)								■								
M3027GT	2.50" (63.5 mm)	2040 lbs. (9.1 kN)	67 psi (4.6 bar)											■					
M3031GT	2.50" (63.5 mm)	2325 lbs. (10.3 kN)	69 psi (4.8 bar)															■	

NOTE: Contact MGM Brakes Sales for models not specified above.

(A) Hold - Off Pressure (psi) is measured as decreasing air pressure at .200" (of full "OFF" stroke position (zero stroke)).
(B) Parking Force (lbs. ± 10%) is measured at 1.25" (31.8 mm) of stroke.

NOTE: Product information and specifications subject to change without notice. Refer to the MGM Brakes website for latest updated information.

S-CAM DRUM BRAKE ACTUATOR PUSH-ROD MEASUREMENT AND ADJUSTMENT

Warning: Always block wheels to prevent vehicle rollaway when performing any brake inspection or maintenance. Improper installation of the new unit could result in malfunctioning brakes or premature failure of the braking system. Do not attempt to service or dissemble the brake actuator parking spring chamber. A large spring with extreme force is located within this chamber. Serious bodily injury could occur if the spring chamber is disassembled.

IMPORTANT: Place blocks under wheels to prevent vehicle runaway before removing air brake actuators.

1. Always follow the brake actuator manufacturer and vehicle OEM service instructions when preforming service work. MGM Brakes service manuals are available on www.mgmbrakes.com.

2. Ensure the service and parking brake chambers are fully released. The push-rod must be fully retracted to the zero position. Reference the appropriate service manual for parking chamber caging instructions. Ensure the service brakes are fully released prior to push-rod measurement.

IMPORTANT - Checking that the yoke pin is loose within the yoke will verify that the actuator and slack adjuster holes are properly aligned.

3. Measure and record the "X" and / or "Y" dimensions as shown in Figure 1.

"X" Dimension - The dimension from bottom of actuator to end of push-rod.
"Y" Dimension - The dimension from bottom of actuator to center line of yoke pin.

Figure 1

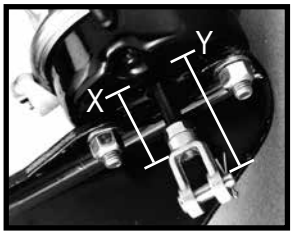

Figure 2

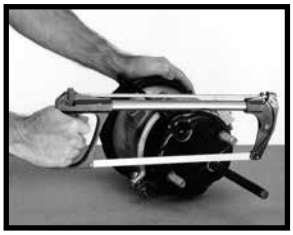

NOTE: If for some reason the spring chamber parking spring cannot be caged and fully released, then the "X" and "Y" dimensions will need to be measured from another actuator of the exact type from the same vehicle provided it is retracted to its zero stroke position (brake fully released) and was operating correctly.

4. Mark the "X" dimension location on the push-rod of the new actuator. Measure from the mounting surface of the new actuator.

5. Thread the jam nut past the mark on the push-rod and align bottom edge of the nut with the mark.

6. Use a sharp hack-saw to cut the push-rod to the marked length.

7. After cutting the rod, thread jam nut off the push-rod to clean up the thread.

8. Thread the jam nut back onto the push-rod followed by the yoke. The yoke from removed unit may be reused provided yoke pin hole is not worn. Adjust yoke to the same "Y" dimension as measured from the removed unit.

IMPORTANT - Ensure final push-rod set up dimension and orientation meets the vehicle manufacturer's recommendations for installation with the mating slack adjuster.

9. Orient the yoke to the proper alignment position. Tighten the locknut against the yoke and torque to 25-50 ft-lbs [34-68 Nm].

BRAKES "OFF" - NOT APPLIED

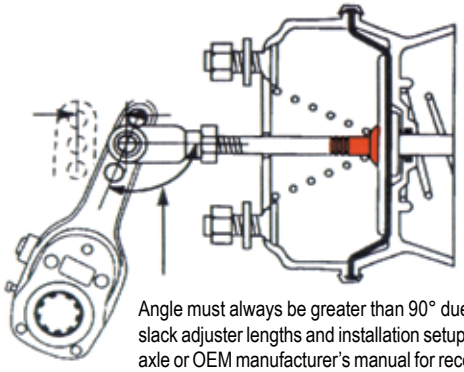

Angle must always be greater than 90° due to various slack adjuster lengths and installation setups. (Refer to axle or OEM manufacturer's manual for recommended angle).

Stroke should be as short as possible with no lining to drum contact.

PROPERLY - ADJUSTED BRAKES "ON" - APPLIED

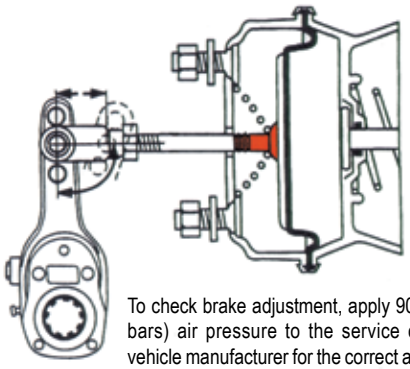

To check brake adjustment, apply 90 to 100 psi (6.2 - 6.9 bars) air pressure to the service chamber. Consult the vehicle manufacturer for the correct angle between the slack adjuster arm and push - rod and/or the push - rod length. This is necessary since different dimensions are required for automatic or manual slacks, various slack lengths and different slack adjuster manufacturers.

IMPROPERLY ADJUSTED BRAKES "ON" - APPLIED

Maximum recommended readjustment stroke has been exceeded)

MGM Brake "Stroke Alert" (Excessive Stroke Warning)

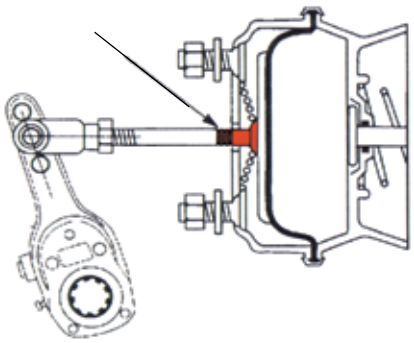

See chart for recommended readjustment stroke

Type	Effective Area	Approximate Service Chamber Diameter		SAE J2899 Stroke Marking	Rated Actuator Stroke		Stroke Adjustment Limit	
	Square Inch	Inches	[mm]		Inches	[mm]	Inches	[mm]
9	9	5.27	[137]	B	1.75	[44]	1.38	[35]
12	12	5.70	[148]	B	1.75	[44]	1.38	[35]
16	16	6.59	[165]	D	2.25	[57]	1.75	[44]
16L	16	7.00	[165]	E	2.50	[64]	2.00	[51]
20	20	6.99	[176]	D	2.25	[57]	1.75	[44]
20L	20	7.00	[176]	E	2.50	[64]	2.00	[51]
24	24	7.31	[186]	D	2.25	[57]	1.75	[44]
24L	24	7.31	[186]	E	2.50	[64]	2.00	[51]
24L3	24	7.31	[186]	F	3.00	[76]	2.50	[64]
30	30	8.32	[209]	E	2.50	[64]	2.00	[51]
30L3	30	8.32	[209]	F	3.00	[76]	2.50	[64]
36	36	9.44	[232]	F	3.00	[76]	2.50	[64]

Note: Hybrid type service chambers including sizes 16, 17, 18, 21, 22, 27 may differ in diameter.

NOTE: The push - rod must remain perpendicular to the bottom surface of the non - pressure chamber (NPC) within ±3° zero to full stroke.

IMPORTANT: RECOMMENDED SPRING BRAKE ACTUATOR DISARMING PROCEDURE

The brake actuator parking chamber includes a powerful high energy parking spring that outputs as much as 3200 lbs [14.2 kN] force. Refuse and scrap operations can crush and cut debris which could result in the parking spring becoming a projectile if disposed as an operational assembly. It is essential that all retired spring brake actuators be safely disarmed prior to disposal to prevent serious personal injury. The actuator spring chamber must be disarmed by cutting at least two parking spring coils while the spring is retained in the actuator chamber assembly. Special tools and training are required to perform this operation.

WARNING

1. **Parking actuators must have the parking spring caged prior to removal.**
2. **Properly disarm spring brake actuators prior to disposal to prevent personal injury.**
3. **Never attempt to remove the parking spring chamber head which contains the power spring.**
4. **Understand and observe all safety precautions and instructions for proper use of cutting tools.**
5. **Always wear appropriate personal protection equipment (PPE) when disarming spring brake actuators.**
6. **It is the user's responsibility to ensure the disarming container and tools are safe and suitable for the operation. The container MUST be strong enough to retain the actuator components and spring in the event that the actuator suddenly separates during the cutting operation. The container must have access holes to allow cutting of the actuator.**

- Ensure the parking chamber is properly caged and remove the actuator from the vehicle.
- Place the actuator in the disarming container. Ensure the access door is completely closed and locked per the manufacturer's recommendations. Orient the actuator so the spring chamber head is accessible through the container access holes.
- Use a cutting torch to cut a hole through the actuator parking spring chamber head and parking spring. Ensure at least two spring coils are completely cut.
- Allow the actuator to cool prior to removal from the disarming container.
- Properly dispose of the actuator following local refuse and scrap regulations.

WARNING – It is the user's responsibility to ensure actuator is completely disarmed and safe prior to disposal.

NOTE: Product information and specifications subject to change without notice. Refer to the MGM Brakes website for latest updated information.

FASTENER TORQUE VALUE CHART

Torque Table

Inlet Fitting

Component	Thread	Torque	Typical Tool Size
Air Fitting	3/8-18 NPTF	25 - 30 ft - lbs [34 - 40 Nm]	11/16 in
	M16x1.5-6H	13 - 15 ft - lbs [18 - 20 Nm]	7/8 in [22 mm]
	M22x1.5-6H	27 - 33 ft - lbs [37 - 44 Nm]	1 1/8 in
	VOSS 203	27 - 33 ft - lbs [37 - 44 Nm]	

Fasteners

Component	Thread	Torque	Tool
Clamp Band Bolt	5/16 - 24 UNF	18 - 23 ft - lbs [24 - 31 Nm]	1/2 in
	3/8 - 16 UNC	30 - 35 ft - lbs [41 - 47 Nm]	9/16 in
Mounting Stud	7/16 - 14 UNC	35 - 40 ft - lbs [47 - 54 Nm]	5/8 in
	5/8 - 11 UNC	133 - 155 ft - lbs [180 - 210 Nm]	15/16 in
	M16 x 1.5 - 6G	133 - 155 ft - lbs [180 - 210 Nm]	24 mm
Mounting Stud - R7A, R8H Remote	M12 x 1.75 - 6G	55 - 60 ft - lbs [74 - 81 Nm]	19 mm
Trunnion Bolt - R4A, R5AHD Remote	5/8 - 18 UNF	86 - 95 ft - lbs [117 - 128 Nm]	15/16 in
Lock Nut - Push-Rod Yoke	1/2 - 20 UNF	20 - 30 ft - lbs [27 - 40 Nm]	3/4 in [19 mm]
	5/8 - 18 UNF	25 - 50 ft - lbs [34 - 68 Nm]	15/16 in
	3/4 - 16 UNF	75 - 100 ft - lbs [102 - 136 Nm]	1 1/8 in
	M16 x 1.5 - 6G	25 - 50 ft - lbs [34 - 68 Nm]	24 mm
Lock Nut - Wedge Tube	1 3/4 - 12 UNC	130 - 150 ft - lbs [176 - 203 Nm]	Spanner

Caging Bolt

Model	State	Torque	Tool
TR	Uncaged/Park - OK Storage Pocket Torque	10 ft - lbs [14 Nm]	3/4 in [19 mm] 15/16 in - Type 36 Only
	Caged/No - Park	13 - 15 ft - lbs [18 - 20 Nm]	
MJ / LTS	Uncaged/Park - OK	50 - 60 ft - lbs [68 - 81 Nm]	3/4 in [19 mm]
	Caged/No - Park	Max 74 ft - lbs [100 Nm]	
LTR	Uncaged/Park - OK	40 - 50 ft - lbs [54 - 68 Nm]	15/16 in
	Caged/No - Park	Max 50 ft - lbs [68 Nm]	

NOTE: Product information and specifications subject to change without notice. Refer to the MGM Brakes website for latest updated information.

S-CAM DRUM ACTUATOR EXTERNAL BREATHER TUBE LENGTH ADJUSTMENT

S-Cam drum parking actuators may require port or clamp band angle adjustment during installation to match the original OEM actuator configuration. If equipped, this may require external breather tubes to be lengthened to account for the new actuator orientation. The following procedure provides guidance on lengthening breather tubes included with MGM Brake S-Cam drum actuators.

Note: MGM Brakes air disc brake actuator service chambers are not serviceable. Modifying the actuator port or clamp band angles is not permitted and will void the warranty.

1. Reference the appropriate service manual for instruction to loosening, rotate and tighten the service champ band. Service manuals are available on www.mgmbrakes.com.

2. Assemble the service parts needed to lengthen the external breather tube.

   - 3/8 in [9.5mm] ID Rubber Extension Tube - MGM P/N 8081128 or appropriate sized Vacuum / Washer Hose
   - Adhesive - High Quality Rubber Cement or Loctite #414
   - (2) Hose Clamps (MGM P/N 8052021) may be used in place of adhesive.

3. Cut the nylon actuator external breather tube (3/8 in [9.5mm] OD) approximately half way between the rubber elbows. (Fig. 1)

4. Cut the rubber extension tube to a length which will join either end of the existing breather tube with 0.5 in [12.7mm] of overlap on each side.

5. Apply adhesive to the outside of both ends of the actuator breather tube.

6. Install the rubber extension tube over the actuator breather tube and position ensuring 0.5 in [12.7mm] engagement on either end.

7. Install and tighten hose clamps on either end of the rubber extension tube if adhesive was not used.

8. Reference the appropriate service manual for final actuator installation and leak check instruction.

Fig. 1: **Cut** **Rotate** **Insert**

NOTE: IMPORTANT - When installing any MGM Brakes model with the breather tube, it is mandatory to position the breather tube in the upper half, or upper quadrant (9:00 to 3:00 o'clock), facing away from the road surface. Failure to comply will void the MGM Brakes Warranty without remedy on these models.

WARNING: Do not remove the spring chamber clamp ring (clamp closest to the release bolt) as serious injury may result from sudden release of the power spring.

CONCERNS WITH MIXING STANDARD AND LONG STROKE ACTUATORS

MGM Brakes recommends that replacement actuators must have the same stroke rating across both sides of an axle. When servicing vehicles equipped with either standard stroke or long stroke actuators it is crucial that the replacement actuator(s) be equivalent in size and stroke rating on both sides of the axle. Always insure that replacement actuators meet the original OEM chamber sizes to insure adequate brake force is maintained.

Upgrading standard stroke 2.5 in [63.5mm] actuators to 3 in [76.2mm] long stroke actuators will provide added safety factor for the foundation brake operation. However, mixing the stroke ratings across an axle could result in imbalanced brake performance during panic stop situations. When upgrading from standard stroke to long stroke actuators, be sure there is adequate clearance for the longer actuator at the worst case suspension and steering articulation. Consulting the vehicle OEM about changing brake actuator specifications is recommended.

Contact between the lining and brake drum of S-cam type foundation brakes generates heat. Brake drums can expand in diameter during heavy use of the service brakes. S-cam brake actuator stroke is directly related to drum diameter. The larger the brake drum expands the more stroke is required of the brake actuator to keep linings in contact with the drum. Brake actuator performance is designed to be optimal within the normal adjustment range. Force output begins to drop off past the allowable stroke adjustment range. “Brake Fade” is a phenomenon where effective braking is lost due to the drums expanding past the point of the brake actuator available stroke. S-cam drum foundation brakes are designed to work with a calculated stroke range.

Upgrading from OEM specified standard stroke to long stroke brake actuators will effectively add an additional 0.5 in [12.7mm] of reserve stroke. The foundation brake will continue to operate within the standard stroke range but the added 0.5 in [12.7mm] of available stroke would then be reserved for emergency panic stop situations. It should be noted that daily pre-trip inspections and brake adjustment checks are both prudent and required to ensure safe vehicle operation.

CAUTION: NEVER MIX CHAMBERS. Actuators must have the same stroke rating across both sides of an axle. It is crucial that the replacement actuator(s) be equivalent in size and stroke rating on both sides of the axle.

SERVICE CONSIDERATIONS FOR BRAKE ACTUATORS WITH "WELDED" YOKES

Many vehicles are equipped with brake actuators employing a welded yoke construction.

The yoke is welded to the push-rod, making it impractical to remove and re-use it. Unless the non-pressure housing (mounting base), push-rod, and/or yoke have been damaged, or are severely worn or corroded, MGM Brakes recommends replacement of the parking spring brake chamber or piggyback as an effective, economical repair for servicing parking brake actuators.

However, if replacement of the entire brake actuator is required, it is recommended that an actuator equipped with a welded yoke be used. Brake actuators with a "Y" dimension less than 2.5 inches must be replaced with a welded yoke construction. Actuators manufactured with a "welded" yoke that have a fixed "Y" dimension, measured from the bottom of the NPC to the center of the yoke pin, of 2.25 inches [57 mm] must be replaced with a welded yoke type of brake chamber. Because the "Y" dimension is relatively short, the corresponding "X" dimension, measured from the bottom of the NPC to the end of the rod, will also be short, at approximately 0.75 inches [19 mm].

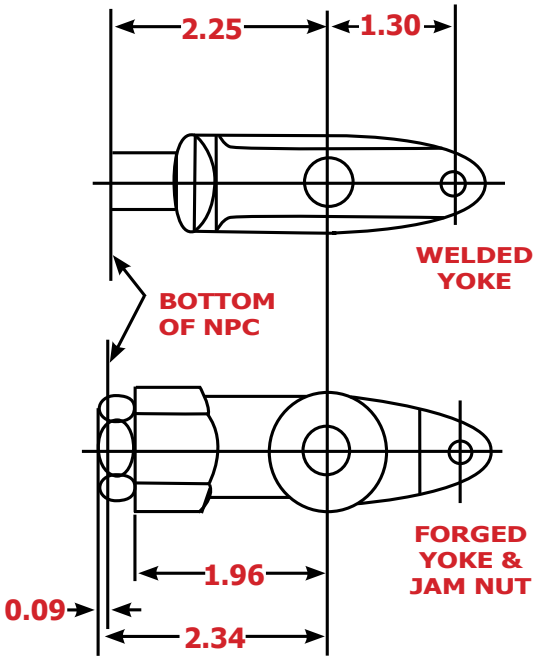

Consequently, if a replacement unit with a "universal" all-thread cut-to-fit push-rod is used, the jam nut will hit the bottom of the non-pressure housing (mounting base) preventing the push-rod from completely retracting. See the illustration showing 0.09 inches [2.3 mm] of interference preventing full retraction. The jam nut will protrude into the NPC and may damage the protective stone shield, if the push-rod opening in the NPC is large enough.

NOTE: FOR THOSE USING 2-PIN SLACK ADJUSTERS: The welded yoke actuators listed above have a measurement between the pins on the welded yoke of 1.3" [33mm]. If the vehicle's original manufacturer's clevis has a measurement other than 1.3" [33mm], the welded yoke chambers listed cannot be used and a threaded rod chamber with a clevis utilizing the proper pin spacing recommended by the vehicle's manufacturer should be used instead.

MGM Brakes recommends any brake actuator with a welded yoke construction having a 2.5 inch "Y" dimension or less always be replaced with another actuator with a welded yoke construction, ensuring proper push-rod retraction. Brake actuators must fully retract in order to completely release the foundation brakes so the lining no longer contacts the drum, allowing the automatic slack adjusters to properly operate and adjust the stroke. The brake actuator life will also be reduced significantly if it is not able to fully retract.

MGM Brake chambers are available only with a 1.3 inches [33 mm] hole spacing for use with two pin slack adjusters. If the vehicle's original manufacturer's clevis has a measurement other than 1.3 inches [33 mm], MGM Brakes welded yoke chamber cannot be used.

NOTE: The listing above is based on known specifications of various manufacturers; however, certain applications may differ than shown.

MGM suggests contacting the vehicle manufacturer to verify the proper actuator specifications and push-rod length to assure a proper replacement is selected.

WARNING: Units manufactured with a welded yoke have a preset "Y" dimension, measured from the bottom of the NPC to the center-line of the yoke pin. There are many different preset "Y" dimensions depending on the application. It is very important that you obtain this "Y" measurement from the existing actuator in order to replace "like for like" to continue proper operation.

NOTE: Product information and specifications subject to change without notice. Refer to the MGM Brakes website for latest updated information.

SAE

DOUBLE DIAPHRAGM SPRING BRAKE CHAMBERS

MODEL (d)	Spring Chamber Size	Rated Service Stroke (in)	Vol. Displ. @ 100psi (in^3) (a)	Hold - Off Pressure Required (psi) (b)	Spring Brake Force - Output (Pounds - Force) @ in. of Stroke (c)								
					1.00	1.25	1.50	1.75	2.00	2.25	2.50	2.75	3.00
TR2024	24	2.25	76.2	70	1280	1210	1150	1080	1000	840	-	-	-
TRxx24DT	24	2.50	76.0	70	1295	1212	1124	1039	954	858	722	-	-
TRxx24HD	24	2.25	76.2	70	1480	1396	1320	1250	1177	1074	-	-	-
TRxx24L	24	2.50	76.2	70	1280	1210	1150	1080	1000	840	620	-	-
TRxx30	30	2.50	101.8	64	1510	1420	1339	1257	1172	1084	994	-	-
TRxx30HD	30	2.50	101.8	64	1681	1580	1488	1396	1303	1211	1119	-	-
TRxx30LP3HD	30	3.00	114.7	68	1681	1580	1488	1396	1303	1211	1119	1026	934
TRxx30LP3	30	3.00	114.7	63	1519	1435	1352	1270	1187	1098	1009	919	837
TR3036	36	2.50	123.6	67	2050	1960	1867	1774	1679	1584	1487	-	-
TR3036L3	36	3.00	145.0	67	2125	2025	1924	1834	1767	1682	1576	1471	1366
TR3636	36	3.00	145.0	67	2050	1960	1867	1774	1679	1584	1487	1390	1280
LTRxx30T	30	2.50	101.2	71	1510	1420	1350	1280	1210	1145	1070	-	-
LTRxx30L3	30	3.00	108.0	68	1615	1525	1435	1350	1260	1160	1050	935	-
LTSxx30ET	30	3.00	109.0	68	1720	1607	1520	1425	1342	1235	1140	1020	885

PISTON TYPE SPRING BRAKE CHAMBERS

MJxx16AT	16	1.75	44.0	74	1404	1310	1211	1098	-	-	-	-	-
MJxx22ET	22	3.00	98.5	65	1780	1725	1624	1546	1468	1389	1310	1230	1151
MJxx24BT	24	2.00	83.3	71	2000	1922	1842	1771	1696	-	-	-	-
MJxx24DT	24	2.50	85.6	71	2000	1922	1842	1771	1696	1607	1528	-	-
MJxx24ET	24	3.00	98.5	71	2000	1922	1842	1771	1696	1607	1528	1449	1370
MJxx28ET	28	3.00	128.4	76	2423	2320	2207	2070	1982	1870	1756	1670	1521
MJxx30ET	30	3.00	128.4	75	2556	2450	2350	2256	2183	2086	1987	1858	1657

REMOTE MOUNT CYLINDERS

MODEL	-	Rated Stroke (in)	-	Hold - Off Pressure (psi)	Spring Brake Force - Output (Pounds - Force) @ in. of stroke						
					1.00	1.50	2.00	2.50	3.00	3.50	4.00
R4A	-	4.50	-	73	800	745	690	640	585	535	480
R5AHD	-	4.20	-	75	1720	1580	1440	1300	1160	1020	875
R7A	-	2.75	-	56	461	429	400	368	-	-	-
R8H	-	2.75	-	1500	461	429	400	368	-	-	-

(**) Brake chambers with 2.00" or less rated stroke are calculated at 1.00" stroke.

(a) Spring chamber volume measured at full "OFF" (zero) stroke. Reference SAE J1469

(b) Hold off pressure measured as decreasing air pressure required to activate spring chamber to within .197" (5 mm) of full "OFF" (deactivated) stroke.

(c) Spring brake force output measured at end of service chamber push-rod using power springs which have been held compressed to assembly shut height for 24 hours to remove initial false load. Forces shown are nominal performance (+/ - 10%) for all spring chamber model sizes.

(d) Performance levels shown hold true for all design versions of the same model size. For example: read the performance for Models TR2430T and TR3030TS as shown above for Model TRXX30 for spring brake force output.

NOTE: Below applies to charts on pages 153-158.

(**) Brake chambers with 2.00" (50.8 mm) or less rated stroke are calibrated at 1.00" (25.4 mm) stroke.

(e) Service chamber volume measured at maximum "on" stroke (ref. SAE J1469).

(f) Service brake force output measured at end of service chamber push-rod. Forces shown are nominal performance (+/- 5%) for all service chamber sizes.

(g) Performance levels shown hold true for all design versions of the same model size. For example: read the same performance for Models TR3036T and TR3030TS as shown for Model TR30xx.

NOTE: Product information and specifications subject to change without notice. Refer to the MGM Brakes website for latest updated information.

SAE

DOUBLE DIAPHRAGM SPRING BRAKE CHAMBERS

MODEL (g)	Rated Service Stroke (in)	Vol. Displ. @ 100 psi Rated Service Stroke (in^3) (e)	Application Pressure of (psi)	Service Brake Force - Output (Pounds - Force) @ in. of Stroke (f)								
				1.00	1.25	1.50	1.75	2.00	2.25	2.50	2.75	3.00
TR16xxDT	2.50	58.5	20	248	241	229	215	192	160	110	-	-
			40	569	563	551	532	494	441	347	-	-
			60	889	886	876	855	806	734	606	-	-
			80	1210	1211	1205	1183	1127	1042	889	-	-
			100	1530	1536	1536	1514	1450	1352	1175	-	-
TR18xxDT	2.50	55.5	20	267	265	256	239	208	150	103		
			40	617	618	607	578	522	414	327		
			60	965	969	958	921	845	699	579		
			80	1310	1320	1311	1269	1179	1004	856		
			100	1654	1670	1665	1621	1520	1326	1151		
TR20xx	2.25	53.4	20	325	325	320	310	250	160	-	-	-
			40	710	710	690	630	540	390	-	-	-
			60	1080	1085	1080	1040	900	620	-	-	-
			80	1410	1480	1470	1375	1200	840	-	-	-
			100	1800	1855	1845	1790	1500	1125	-	-	-
TR20xx	2.50	57.2	20	304	305	299	287	266	200	91	-	-
			40	676	685	678	654	610	490	296	-	-
			60	1053	1069	1060	1030	967	810	538	-	-
			80	1432	1455	1443	1409	1332	1150	812	-	-
			100	1805	1836	1823	1786	1695	1489	1101	-	-
TR20xxDT	2.50	55.6	20	292	301	302	292	270	229	158	-	-
			40	669	689	695	679	640	569	447	-	-
			60	1046	1080	1087	1067	1016	921	781	-	-
			80	1423	1469	1477	1456	1394	1281	1073	-	-
			100	1798	1857	1865	1846	1776	1652	1307	-	-
TR22xxDT	2.50	67.7	20	330	328	323	311	288	260	190	-	-
			40	741	741	737	722	685	629	504	-	-
			60	1150	1154	1154	1140	1092	1014	848	-	-
			80	1557	1566	1573	1561	1506	1408	1208	-	-
			100	1962	1977	1993	1984	1923	1808	1581	-	-
TR24xxDT	2.50	67.9	20	380	384	384	375	349	309	211	-	-
			40	836	844	846	834	796	726	558	-	-
			60	1287	1300	1308	1295	1251	1160	947	-	-
			80	1733	1753	1767	1757	1708	1600	1358	-	-
			100	2172	2202	2225	2218	2165	2044	1787	-	-
TR24xxL	2.50	69.8	20	362	372	379	377	365	336	278	-	-
			40	808	824	840	842	820	773	676	-	-
			60	1245	1270	1296	1302	1279	1223	1106	-	-
			80	1682	1717	1757	1764	1739	1674	1534	-	-
			100	2115	2158	2211	2224	2201	2133	1980	-	-
TR30xx	2.50	88.3	20	526	528	528	515	489	427	290	-	-
			40	1120	1130	1135	1115	1064	950	718	-	-
			60	1717	1737	1748	1724	1658	1510	1208	-	-
			80	2307	2337	2358	2331	2254	2083	1731	-	-
			100	2894	2937	2967	2940	2856	2667	2277	-	-

PERFORMANCE CHART - SERVICE BRAKE CHAMBERS

SAE

DOUBLE DIAPHRAGM SPRING BRAKE CHAMBERS

MODEL (g)	Rated Service Stroke (in)	Vol. Displ. @ 100 psi Rated Service Stroke (in^3) (e)	Application Pressure of (psi)	Service Brake Force - Output (Pounds - Force) @ in. Stroke (f)								
				1.00	1.25	1.50	1.75	2.00	2.25	2.50	2.75	3.00
TR20xxLP3H	3.00	68.3	20	293	298	308	312	312	305	295	277	230
			40	654	662	679	695	699	693	679	647	568
			60	1006	1018	1048	1074	1084	1081	1067	1026	925
			80	1353	1371	1415	1451	1468	1470	1457	1409	1294
			100	1693	1718	1777	1826	1850	1858	1848	1796	1675
TR24xxLP3	3.00	83.2	20	355	358	368	376	378	369	351	326	246
			40	783	790	814	835	839	827	795	750	616
			60	1204	1218	1255	1288	1296	1282	1247	1184	1008
			80	1623	1642	1694	1738	1752	1734	1696	1620	1399
			100	2034	2061	2129	2185	2204	2188	2147	2067	1800
TR30xxLP3	3.00	108.1	20	493	508	524	524	512	498	479	446	363
			40	1062	1091	1109	1113	1103	1090	1063	1009	892
			60	1628	1658	1695	1698	1694	1683	1649	1576	1442
			80	2183	2229	2277	2283	2283	2274	2241	2149	1997
			100	2735	2788	2855	2867	2870	2868	2835	2745	2581
TR36xx	3.00	122.6	20	624	624	626	619	607	584	539	446	284
			40	1338	1334	1328	1324	1311	1298	1218	1087	846
			60	2042	2030	2029	2028	2014	1976	1898	1731	1436
			80	2733	2720	2727	2733	2718	2681	2591	2405	2071
			100	3412	3402	3423	3444	3439	3411	3336	3169	2858
LTR24xxT	2.50	69.8	20	362	372	379	377	365	336	278	-	-
			40	808	824	840	842	820	773	676	-	-
			60	1245	1270	1296	1302	1279	1223	1106	-	-
			80	1682	1717	1757	1764	1739	1674	1534	-	-
			100	2115	2158	2211	2224	2201	2133	1980	-	-
LTR30xxT	2.50	85.6	20	526	528	528	515	489	427	290	-	-
			40	1120	1130	1135	1115	1064	950	718	-	-
			60	1717	1737	1748	1724	1658	1510	1208	-	-
			80	2307	2337	2358	2331	2254	2083	1731	-	-
			100	2894	2937	2967	2940	2856	2667	2277	-	-
LTR24xxL3	3.00	83.2	20	355	358	368	376	378	369	351	326	246
			40	783	790	814	835	839	827	795	750	616
			60	1204	1218	1255	1288	1296	1282	1247	1184	1008
			80	1623	1642	1694	1738	1752	1734	1696	1620	1399
			100	2034	2061	2129	2185	2204	2188	2147	2067	1800
LTR30xxL3	3.00	107.5	20	493	508	524	524	512	498	479	446	363
			40	1062	1091	1109	1113	1103	1090	1063	1009	892
			60	1628	1658	1695	1698	1694	1683	1649	1576	1442
			80	2183	2229	2277	2283	2283	2274	2241	2149	1997
			100	2735	2788	2855	2867	2870	2868	2835	2745	2581
LTS30xxET	3.00	109	20	490	518	519	527	517	495	478	447	400
			40	1086	1096	1104	1122	1118	1100	1073	998	927
			60	1631	1679	1691	1701	1698	1687	1645	1557	1458
			80	2202	2225	2274	2294	2290	2271	2237	2138	2027
			100	2753	2783	2829	2881	2893	2882	2829	2712	2513

SAE

PISTON TYPE SPRING BRAKE CHAMBERS

MODEL(g)	Rated Service Stroke (in)	Vol. Displ. @ 100 psi Rated Service Stroke (in^3) (e)	Application Pressure of (psi)	Service Brake Force - Output (Pounds - Force) @ in. of Stroke (f)								
				1.00	1.25	1.50	1.75	2.00	2.25	2.50	2.75	3.00
MJ12xxAT	1.75	26.5	20	190	190	150	90	-	-	-	-	-
			40	410	400	350	200	-	-	-	-	-
			60	650	620	545	360	-	-	-	-	-
			80	900	875	760	490	-	-	-	-	-
			100	1120	1080	930	650	-	-	-	-	-
MJ16xxBT	2.00	42.7	20	295	307	314	312	14	-	-	-	-
			40	615	629	645	643	261	-	-	-	-
			60	927	946	968	963	460	-	-	-	-
			80	1234	1258	1286	1270	621	-	-	-	-
			100	1545	1574	1608	1554	799	-	-	-	-
MJ16xxDT	2.50	62.5	20	258	251	242	232	215	190	150	-	-
			40	581	574	566	552	526	483	411	-	-
			60	902	898	893	877	844	787	691	-	-
			80	1223	1222	1220	1205	1167	1100	984	-	-
			100	1539	1541	1544	1530	1490	1412	1282	-	-
MJ17xxET	3.00	68.3	20	269	258	248	239	225	207	184	148	73
			40	597	580	571	560	542	515	472	401	268
			60	920	901	894	887	869	834	777	683	516
			80	1238	1219	1215	1212	1194	1154	1087	975	773
			100	1551	1534	1538	1544	1529	1492	1423	1303	1087
MJ18xxDT	2.50	56.7	20	284	282	278	268	249	220	161		
			40	636	638	635	622	592	540	431		
			60	986	992	992	978	942	872	729		
			80	1332	1343	1349	1336	1295	1213	1048		
			100	1676	1695	1707	1695	1651	1560	1379		
MJ20xxDT	2.50	56.7	20	286	296	295	284	263	222	132	-	-
			40	648	668	675	661	626	557	402	-	-
			60	1012	1046	1058	1041	997	904	703	-	-
			80	1374	1420	1438	1419	1368	1258	1001	-	-
			100	1735	1795	1818	1799	1744	1618	1307	-	-
MJ20xxET	3.00	68.3	20	293	298	308	312	312	305	295	277	230
			40	654	662	679	695	699	693	679	647	568
			60	1006	1018	1048	1074	1084	1081	1067	1026	925
			80	1353	1371	1415	1451	1468	1470	1457	1409	1204
			100	1693	1718	1777	1826	1850	1858	1848	1796	1675
MJ22xxDT	2.50	67.8	20	339	336	329	315	295	266	201	-	-
			40	748	744	738	720	684	623	500	-	-
			60	1157	1156	1153	1133	1087	1000	835	-	-
			80	1562	1566	1569	1549	1494	1387	1192	-	-
			100	1970	1979	1989	1972	1910	1786	1565	-	-
MJ24xxDT	2.50	67.8	20	377	382	380	371	352	312	211	-	-
			40	836	843	842	830	798	725	546	-	-
			60	1291	1301	1303	1290	1253	1159	934	-	-
			80	1740	1754	1763	1753	1713	1606	1361	-	-
			100	2182	2204	2220	2212	2169	2046	1785	-	-

PERFORMANCE CHART - SERVICE BRAKE CHAMBERS

SAE

PISTON TYPE SPRING BRAKE CHAMBERS

MODEL (g)	Rated Service Stroke (in)	Vol. Displ. @ 100 psi Rated Service Stroke (in^3) (e)	Application Pressure of (psi)	Service Brake Force - Output (Pounds - Force) @ in. of Stroke (f)								
				1.00	1.25	1.50	1.75	2.00	2.25	2.50	2.75	3.00
MJ24xxET	3.00	82.0	20	355	358	368	376	378	369	351	326	246
			40	783	790	814	835	839	827	795	750	616
			60	1204	1218	1255	1288	1296	1282	1247	1184	1008
			80	1623	1642	1694	1738	1752	1734	1696	1620	1399
			100	2034	2061	2129	2185	2204	2188	2147	2067	1800
MJ27xxET	3.00	106.3	20	272	261	252	241	229	211	186	146	92
			40	598	580	569	558	542	515	469	394	286
			60	915	893	883	876	860	826	766	666	514
			80	1232	1208	1200	1197	1183	1146	1073	950	764
			100	1545	1522	1522	1519	1513	1476	1398	1261	1046
MJ30xxET	3.00	106.4	20	493	508	524	524	512	498	479	446	363
			40	1062	1091	1109	1113	1103	1090	1063	1009	892
			60	1628	1658	1695	1698	1694	1683	1649	1576	1442
			80	2183	2229	2277	2283	2283	2274	2241	2149	1997
			100	2735	2788	2855	2867	2870	2868	2835	2745	2581
MJ36xxET	3.00	129.6	20	622	623	623	620	612	598	574	534	438
			40	1313	1310	1319	1322	1313	1295	1259	1188	1027
			60	1989	1989	2008	2017	2011	1992	1950	1860	1659
			80	2658	2667	2698	2714	2712	2694	2647	2543	2318
			100	3324	3342	3385	3410	3414	3398	3348	3235	2994

SERVICE CHAMBERS

MODEL	Rated Service Stroke (in)	Vol. Displ. @ 100 psi Rated Service Stroke (in^3) (e)	Application Pressure of (psi)	Service Brake Force - Output (Pounds - Force) @ in. of Stroke (f)								
				1.00	1.25	1.50	1.75	2.00	2.25	2.50	2.75	3.00
C12	1.75	26.0	20	190	190	150	90	-	-	-	-	-
			40	410	400	350	200	-	-	-	-	-
			60	650	620	545	360	-	-	-	-	-
			80	900	875	760	490	-	-	-	-	-
			100	1120	1080	930	650	-	-	-	-	-
C16	2.25	45.1	20	250	250	250	250	215	135	-	-	-
			40	580	600	600	580	490	335	-	-	-
			60	900	915	920	890	780	510	-	-	-
			80	1220	1250	1250	1200	1050	755	-	-	-
			100	1525	1585	1585	1510	1360	1035	-	-	-
CS16D	2.50	64.7	20	268	257	248	236	220	195	158	-	-
			40	595	582	573	559	535	496	433	-	-
			60	917	905	898	885	858	807	724	-	-
			80	1237	1226	1223	1213	1183	1124	1026	-	-
			100	1555	1547	1548	1542	1511	1445	1332	-	-
C16L	2.50	48.5	20	260	260	260	250	250	240	220	-	-
			40	605	605	605	600	595	550	475	-	-
			60	930	930	930	930	910	860	750	-	-
			80	1260	1260	1270	1280	1260	1200	1090	-	-
			100	1590	1595	1610	1640	1600	1550	1400	-	-

SAE

SERVICE CHAMBERS

MODEL	Rated Service Stroke (in)	Vol. Displ. @ 100 psi Rated Service Stroke (in^3) (e)	Application Pressure of (psi)	Service Brake Force - Output (Pounds - Force) @ in. of Stroke (f)								
				1.00	1.25	1.50	1.75	2.00	2.25	2.50	2.75	3.00
C16LH	2.50	62.2	20	265	260	250	240	225	200	165	-	-
			40	598	575	565	550	530	500	435	-	-
			60	920	900	890	875	850	800	730	-	-
			80	1240	1220	1210	1200	1170	1110	1020	-	-
			100	1560	1550	1540	1525	1495	1440	1315	-	-
CS18D	2.50	58.8	20	270	269	264	252	231	198	142	-	-
			40	616	616	614	599	566	508	400	-	-
			60	960	963	965	950	911	833	686	-	-
			80	1299	1307	1315	1302	1257	1165	988	-	-
			100	1635	1649	1664	1656	1608	1505	1307	-	-
C20	2.25	51.5	20	325	325	320	310	250	160	-	-	-
			40	710	710	690	630	540	390	-	-	-
			60	1080	1085	1080	1040	900	620	-	-	-
			80	1410	1480	1470	1375	1200	840	-	-	-
			100	1800	1855	1845	1790	1500	1125	-	-	-
CS20D	2.50	58.8	20	292	303	310	308	293	270	217	-	-
			40	662	680	701	701	678	640	550	-	-
			60	1028	1055	1092	1090	1064	1016	899	-	-
			80	1390	1429	1480	1478	1453	1398	1261	-	-
			100	1749	1799	1865	1866	1841	1779	1629	-	-
C20L	2.50	58.7	20	295	298	300	300	300	280	245	-	-
			40	655	665	680	690	680	645	570	-	-
			60	1010	1030	1060	1075	1060	1015	900	-	-
			80	1380	1400	1450	1465	1450	1390	1250	-	-
			100	1750	1780	1840	1850	1840	1760	1610	-	-
CS20L	2.50	58.7	20	295	298	300	300	300	280	245	-	-
			40	655	665	680	690	680	645	570	-	-
			60	1010	1030	1060	1075	1060	1015	900	-	-
			80	1380	1400	1450	1465	1450	1390	1250	-	-
			100	1750	1780	1840	1850	1840	1760	1610	-	-
CS22D	2.50	68.4	20	327	328	326	316	295	269	215	-	-
			40	736	738	739	728	696	647	542	-	-
			60	1144	1149	1156	1147	1107	1037	890	-	-
			80	1550	1559	1573	1568	1522	1436	1255	-	-
			100	1952	1969	1991	1991	1942	1840	1632	-	-
CS24D	2.50	68.3	20	359	372	381	379	357	320	243	-	-
			40	799	824	846	842	811	751	618	-	-
			60	1238	2179	1310	1304	1270	1193	1023	-	-
			80	1676	1732	1771	1767	1730	1640	1449	-	-
			100	2024	2091	2135	2136	2095	1997	1798	-	-
C24L	2.50	69.6	20	362	372	379	377	365	336	278	-	-
			40	808	824	840	842	820	773	676	-	-
			60	1245	1270	1296	1302	1279	1223	1106	-	-
			80	1682	1717	1757	1764	1739	1674	1534	-	-
			100	2115	2158	2211	2224	2201	2133	1980	-	-

SERVICE CHAMBERS

SAE

MODEL	Rated Service Stroke (in)	Vol. Displ. @ 100 psi Rated Service Stroke (in^3) (e)	Application Pressure of (psi)	Service Brake Force - Output (Pounds - Force) @ in. of Stroke (f)								
				1.00	1.25	1.50	1.75	2.00	2.25	2.50	2.75	3.00
C27	2.50	67.1	20	445	437	433	424	409	389	359	-	-
			40	959	957	958	951	930	897	849	-	-
			60	1478	1484	1490	1484	1460	1419	1351	-	-
			80	1986	2001	2016	2007	1983	1937	1859	-	-
			100	2496	2520	2539	2533	2509	2460	2361	-	-
C30	2.50	87.0	20	526	528	528	515	489	427	290	-	-
			40	1120	1130	1135	1115	1064	950	718	-	-
			60	1717	1737	1748	1724	1658	1510	1208	-	-
			80	2307	2337	2358	2331	2254	2083	1731	-	-
			100	2894	2937	2967	2940	2856	2667	2277	-	-
C36	3.00	127.2	20	624	624	626	619	607	584	539	446	284
			40	1338	1334	1328	1324	1311	1298	1218	1087	846
			60	2042	2030	2029	2028	2014	1976	1898	1731	1436
			80	2733	2720	2727	2733	2718	2681	2591	2405	2071
			100	3412	3402	3423	3444	3439	3411	3336	3169	2858
CS20L3	3.00	68.5	20	293	298	308	312	312	305	295	277	230
			40	654	662	679	695	699	693	679	647	568
			60	1006	1018	1048	1074	1084	1081	1067	1026	925
			80	1353	1371	1415	1451	1468	1470	1457	1409	1294
			100	1693	1718	1777	1826	1850	1858	1848	1796	1675
C24L3	3.00	84.7	20	355	358	368	376	378	369	351	326	246
			40	783	790	814	835	839	827	795	750	616
			60	1204	1218	1255	1288	1296	1282	1247	1184	1008
			80	1623	1642	1694	1738	1752	1734	1696	1620	1399
			100	2034	2061	2129	2185	2204	2188	2147	2067	1800
C30L3	3.00	112.0	20	493	508	524	524	512	498	479	446	363
			40	1062	1091	1109	1113	1103	1090	1063	1009	892
			60	1628	1658	1695	1698	1694	1683	1649	1576	1442
			80	2183	2229	2277	2283	2283	2274	2241	2149	1997
			100	2735	2788	2855	2867	2870	2868	2835	2745	2581
CW9	1.75	22.0	20	175	170	150	55	-	-	-	-	-
			40	355	340	300	174	-	-	-	-	-
			60	530	510	415	260	-	-	-	-	-
			80	720	690	615	375	-	-	-	-	-
			100	895	860	775	515	-	-	-	-	-
CW12	1.75	27.0	20	225	225	180	70	-	-	-	-	-
			40	455	455	385	200	-	-	-	-	-
			60	685	680	570	350	-	-	-	-	-
			80	915	910	820	560	-	-	-	-	-
			100	1145	1130	1080	800	-	-	-	-	-
CW16	1.75	37.0	20	312	310	300	145	-	-	-	-	-
			40	630	620	610	385	-	-	-	-	-
			60	960	950	920	630	-	-	-	-	-
			80	1290	1275	1235	780	-	-	-	-	-
			100	1605	1585	1560	980	-	-	-	-	-

METRIC

DOUBLE DIAPHRAGM SPRING BRAKE CHAMBERS

MODEL (d)	Spring Chamber Size	Rated Service Stroke (mm)	Vol. Displ. @ 6.89 bar (cm^3) (a)	Hold - Off Pressure Required (bar) (b)	Spring Brake Force - Output (Newtons) @ mm. of Stroke (c)								
					25.4	31.8	38.1	44.5	50.8	57.2	63.5	69.9	76.2
TR2024	24	57.2	1249	4.8	5694	5382	5115	4804	4448	3737	-	-	-
TRxx24DT	24	63.5	1237	4.8	5760	5391	5000	4622	4244	3817	3212	-	-
TRxx24HD	24	57.2	1249	5.4	6583	6210	5872	5560	5236	4777	-	-	-
TRxx24L	24	63.5	1237	4.8	5694	5382	5115	4804	4448	3737	2758	-	-
TRxx30	30	63.5	1668	4.4	6717	6316	5956	5591	5213	4822	4422	-	-
TRxx30HD	30	63.5	1668	4.4	7477	7028	6619	6210	5796	5387	4978	-	-
TRxx30LP3HD	30	76.2	1880	4.7	7477	7028	6619	6210	5796	5387	4978	4564	4155
TRxx30LP3	30	76.2	1880	4.3	6757	6383	6014	5649	5280	4884	4488	4088	3723
TR3036	36	63.5	2025	4.6	9119	8719	8305	7891	7469	7046	6615	-	-
TR3036L3	36	3.00	2374	4.6	9452	9007	8558	8158	7860	7481	7010	6543	-
TR3636	36	76.2	2273	4.7	9119	8719	8305	7891	7469	7046	6615	6183	5694
LTRxx30T	30	63.5	1658	4.9	6717	6316	6005	5694	5382	5093	4760	-	-
LTRxx30L3	30	76.2	1770	4.7	7184	6784	6383	6005	5605	5160	4671	4159	-
LTSxx30ET	30	76.2	1786	4.7	7651	7148	6761	6338	5969	5493	5071	4537	3936

PISTON TYPE SPRING BRAKE CHAMBERS

MJxx16AT	16	44.5	720	5.1	6245	5827	5387	4884	-	-	-	-	-
MJxx22ET	22	76.2	1614	4.7	7920	7670	7230	6880	6530	6180	5830	5470	5120
MJxx24BT	24	50.8	1365	4.9	8896	8549	8194	7878	7544	-	-	-	-
MJxx24DT	24	63.5	1403	4.9	8896	8549	8194	7878	7544	7148	6797	-	-
MJxx24ET	24	76.2	1614	4.8	8896	8549	8194	7878	7544	7148	6797	6445	6094
MJxx28ET	28	76.2	2104	4.8	10778	10320	9817	9208	8816	8318	7811	7428	6766
MJxx30ET	30	76.2	2104	5.2	11370	10898	10453	10035	9710	9279	8839	8265	7371

REMOTE MOUNT CYLINDERS

MODEL	-	Rated Stroke (mm)	-	Hold - Off Pressure (bar)	Spring Brake Force - Output (Newtons) @ mm. of Stroke						
					25.4	38.1	50.8	63.5	76.2	88.9	101.6
R4A	-	114.3	-	5.0	-	3314	3069	2847	2602	2380	2135
R5AHD	-	106.7	-	5.2	7651	7028	6405	5783	5160	4537	3892
R7A	-	69.9	-	4.1	2051	1908	1779	1637	-	-	-
R8H	-	69.9	-	103.5	2051	1908	1779	1637	-	-	-

(**) Brake chambers with 2.00" (50.8 mm) or less rated stroke are calibrated at 1.00" (25.4 mm) stroke.

(a) Spring chamber volume measured at full "OFF" (zero) stroke. Reference SAE J1469

(b) Hold off pressure measured as decreasing air pressure required to activate spring chamber to within .020" (5 mm) of full "OFF" (deactivated) stroke.

(c) Spring brake force output measured at end of service chamber push-rod using power springs which have been held compressed to assembly shut height for 24 hours to remove initial false load. Forces shown are nominal performance (+/ - 10%) for all spring chamber model sizes.

(d) Performance levels shown hold true for all design versions of the same model size. For example… read the performance for Models TR2430T and TR3030TS as shown above for Model TRXX30 for spring brake force output.

NOTE: Below applies to charts on pages 160-165.

(**) Brake chambers with 2.00" (50.8 mm) or less rated stroke are calibrated at 1.00" (25.4 mm) stroke.

(e) Service chamber volume measured at maximum "on" stroke (ref. SAE J1469).

(f) Service brake force output measured at end of service chamber push-rod. Forces shown are nominal performance (+/- 5%) for all service chamber sizes.

(g) Performance levels shown hold true for all design versions of the same model size. For example… read the same performance for Models TR3036T and TR3030TS as shown above for Model TR30xx.

NOTE: Product information and specifications subject to change without notice. Refer to the MGM Brakes website for latest updated information.

PERFORMANCE CHART - SPRING BRAKE CHAMBERS

METRIC

DOUBLE DIAPHRAGM SPRING BRAKE CHAMBERS

MODEL (g)	Rated Service Stroke (mm)	Vol. Displ. @ 6.89 bar Rated Service Stroke (cm^3) (e)	Application Pressure of (bar)	Service Brake Force - Output (Newtons) @ mm. Stroke (f)								
				25.4	31.8	38.1	44.5	50.8	57.2	63.5	69.9	76.2
TR16xxDT	63.5	959	1.4	1103	1072	1019	956	854	712	489	-	-
			2.8	2531	2504	2451	2366	2197	1962	1544	-	-
			4.1	3954	3941	3897	3803	3585	3265	2696	-	-
			5.5	5382	5387	5360	5262	5013	4635	3954	-	-
			6.9	6806	6832	6832	6735	6450	6014	5227	-	-
TR18xxDT	63.5	909	1.4	1187	1179	1141	1064	924	669	456	-	-
			2.8	2746	2747	2699	2572	2320	1842	1456	-	-
			4.1	4294	4312	4263	4099	3758	3108	2575	-	-
			5.5	5826	5872	5832	5645	5243	4467	3807	-	-
			6.9	7356	7430	7408	7210	6762	5897	5122	-	-
TR20xx	57.2	875	1.4	1446	1446	1423	1379	1112	712	-	-	-
			2.8	3158	3158	3069	2802	2402	1735	-	-	-
			4.1	4804	4826	4804	4626	4003	2758	-	-	-
			5.5	6272	6583	6539	6116	5338	3736	-	-	-
			6.9	8007	8251	8207	7962	6672	5004	-	-	-
TR20xx	63.5	937	1.4	1353	1356	1328	1276	1182	891	404	-	-
			2.8	3008	3047	3015	2910	2713	2177	1315	-	-
			4.1	4685	4756	4713	4581	4300	3602	2393	-	-
			5.5	6369	6473	6420	6269	5924	5114	3612	-	-
			6.9	8031	8166	8110	7946	7541	6623	4898	-	-
TR20xxDT	63.5	911	1.4	1299	1339	1343	1299	1201	1019	703	-	-
			2.8	2976	3065	3091	3020	2847	2531	1988	-	-
			4.1	4653	4804	4835	4746	4519	4097	3474	-	-
			5.5	6330	6534	6570	6477	6201	5698	4773	-	-
			6.9	7998	8260	8296	8211	7900	7348	5814	-	-
TR22xxDT	63.5	1110	1.4	1468	1459	1437	1383	1281	1157	845	-	-
			2.8	3296	3296	3278	3212	3047	2798	2242	-	-
			4.1	5115	5133	5133	5071	4857	4510	3772	-	-
			5.5	6926	6966	6997	6944	6699	6263	5373	-	-
			6.9	8727	8794	8865	8825	8554	8042	7033	-	-
TR24xxDT	63.5	1113	1.4	1690	1708	1708	1668	1552	1374	939	-	-
			2.8	3719	3754	3763	3710	3541	3229	2482	-	-
			4.1	5725	5783	5818	5760	5565	5160	4212	-	-
			5.5	7709	7798	7860	7815	7598	7117	6041	-	-
			6.9	9661	9795	9897	9866	9630	9092	7949	-	-
TR24xxL	76.2	1144	1.4	1610	1655	1686	1677	1624	1495	1237	-	-
			2.8	3594	3665	3736	3745	3648	3438	3007	-	-
			4.1	5538	5649	5765	5792	5689	5440	4920	-	-
			5.5	7482	7638	7815	7847	7735	7446	6824	-	-
			6.9	9408	9599	9835	9893	9790	9488	8807	-	-
TR30xx	63.5	1447	1.4	2340	2349	2349	2291	2175	1899	1290	-	-
			2.8	4982	5026	5049	4960	4733	4226	3194	-	-
			4.1	7638	7727	7775	7669	7375	6717	5373	-	-
			5.5	10262	10395	10489	10369	10026	9266	7700	-	-
			6.9	12873	13064	13198	13078	12704	11863	10129	-	-

METRIC

DOUBLE DIAPHRAGM SPRING BRAKE CHAMBERS

MODEL (g)	Rated Service Stroke (mm)	Vol. Displ. @ 6.89 bar Rated Service Stroke (cm^3) (e)	Application Pressure of (bar)	Service Brake Force - Output (Newtons) @ mm. Stroke (f)								
				25.4	31.8	38.1	44.5	50.8	57.2	63.5	69.9	76.2
TR20xxLP3H	76.2	1119	1.4	1303	1326	1370	1388	1388	1357	1312	1232	1023
			2.8	2909	2945	3020	3091	3109	3083	3020	2878	2527
			4.1	4475	4528	4662	4777	4822	4809	4746	4564	4115
			5.5	6018	6098	6294	6454	6530	6539	6481	6268	5756
			6.9	7531	7642	7904	8122	8229	8265	8220	7989	7451
TR24xxLP3	76.2	1363	1.4	1579	1592	1637	1673	1681	1641	1561	1450	1094
			2.8	3483	3514	3621	3714	3732	3679	3536	3336	2740
			4.1	5356	5418	5582	5729	5765	5703	5547	5267	4484
			5.5	7219	7304	7535	7731	7793	7713	7544	7206	6223
			6.9	9048	9168	9470	9719	9804	9733	9550	9194	8007
TR30xxLP3	76.2	1771	1.4	2193	2260	2331	2331	2277	2215	2131	1984	1615
			2.8	4724	4853	4933	4951	4906	4849	4728	4488	3968
			4.1	7242	7375	7540	7553	7535	7486	7335	7010	6414
			5.5	9710	9915	10129	10155	10155	10115	9968	9559	8883
			6.9	12166	12402	12700	12753	12766	12757	12611	12210	11481
TR36xx	76.2	2009	1.4	2776	2776	2785	2753	2700	2598	2398	1984	1263
			2.8	5952	5934	5907	5889	5832	5774	5418	4835	3763
			4.1	9083	9030	9025	9021	8959	8790	8443	7700	6388
			5.5	12157	12099	12130	12157	12090	11926	11525	10698	9212
			6.9	15177	15133	15226	15320	15297	15173	14839	14096	12713
LTR24xxT	63.5	1144	1.4	1610	1655	1686	1677	1624	1495	1237	-	-
			2.8	3594	3665	3736	3745	3648	3438	3007	-	-
			4.1	5538	5649	5765	5792	5689	5440	4920	-	-
			5.5	7482	7638	7815	7847	7735	7446	6824	-	-
			6.9	9408	9599	9835	9893	9790	9488	8807	-	-
LTR30xxT	63.5	1403	1.4	2340	2349	2349	2291	2175	1899	1290	-	-
			2.8	4982	5026	5049	4960	4733	4226	3194	-	-
			4.1	7638	7727	7775	7669	7375	6717	5373	-	-
			5.5	10262	10395	10489	10369	10026	9266	7700	-	-
			6.9	12873	13064	13198	13078	12704	11863	10129	-	-
LTR24xxL3	76.2	1363	1.4	1579	1592	1637	1673	1681	1641	1561	1450	1094
			2.8	3483	3514	3621	3714	3732	3679	3536	3336	2740
			4.1	5356	5418	5582	5729	5765	5703	5547	5267	4484
			5.5	7219	7304	7535	7731	7793	7713	7544	7206	6223
			6.9	9048	9168	9470	9719	9804	9733	9550	9194	8007
LTR30xxL3	76.2	1762	1.4	2193	2260	2331	2331	2277	2215	2131	1984	1615
			2.8	4724	4853	4933	4951	4906	4849	4728	4488	3968
			4.1	7242	7375	7540	7553	7535	7486	7335	7010	6414
			5.5	9710	9915	10129	10155	10155	10115	9968	9559	8883
			6.9	12166	12402	12700	12753	12766	12757	12611	12210	11481
LTS30xxET	76.2	1786	1.4	2180	2304	2309	2344	2300	2202	2126	1988	1779
			2.8	4831	4875	4911	4991	4973	4893	4773	4439	4123
			4.1	7255	7468	7522	7566	7553	7504	7317	6926	6485
			5.5	9794	9897	10115	10204	10186	10101	9950	9510	9016
			6.9	12245	12379	12583	12815	12868	12819	12583	12063	11178

NOTE: Product information and specifications subject to change without notice. Refer to the MGM Brakes website for latest updated information.

METRIC

PISTON TYPE SPRING BRAKE CHAMBERS

MODEL (g)	Rated Service Stroke (mm)	Vol. Displ. @ 6.89 bar Rated Service Stroke (cm^3) (e)	Application Pressure of (bar)	Service Brake Force - Output (Newtons) @ mm. of Stroke (f)								
				25.4	31.8	38.1	44.5	50.8	57.2	63.5	69.9	76.2
MJ12xxAT	44.5	434	1.4	845	845	667	400	-	-	-	-	-
			2.8	1824	1779	1557	890	-	-	-	-	-
			4.1	2891	2758	2424	1601	-	-	-	-	-
			5.5	4003	3892	3381	2180	-	-	-	-	-
			6.9	4982	4804	4137	2891	-	-	-	-	-
MJ16xxBT	50.8	700	1.4	1312	1366	1397	1388	62	-	-	-	-
			2.8	2736	2798	2869	2860	1161	-	-	-	-
			4.1	4123	4208	4306	4284	2046	-	-	-	-
			5.5	5489	5596	5720	5649	2762	-	-	-	-
			6.9	6872	7001	7153	6913	3554	-	-	-	-
MJ16xxDT	63.5	1024	1.4	1148	1117	1076	1032	956	845	667	-	-
			2.8	2584	2553	2518	2455	2340	2148	1828	-	-
			4.1	4012	3995	3972	3901	3754	3501	3074	-	-
			5.5	5440	5436	5427	5360	5191	4893	4377	-	-
			6.9	6846	6855	6868	6806	6628	6281	5703	-	-
MJ17xxET	76.2	1119	1.4	1194	1146	1103	1062	1000	919	816	658	325
			2.8	2656	2581	2542	2491	2411	2290	2099	1782	1192
			4.1	4091	4008	3977	3944	3864	3711	3458	3037	2297
			5.5	5509	5423	5405	5391	5312	5132	4835	4335	3438
			6.9	6900	6825	6843	6870	6803	6636	6331	5797	4834
MJ18xxDT	63.5	929	1.4	1264	1256	1237	1192	1108	977	716	-	-
			2.8	2829	2837	2825	2765	2635	2401	1918	-	-
			4.1	4387	4414	4414	4351	4191	3880	3243	-	-
			5.5	5924	5976	6002	5941	5759	5397	4662	-	-
			6.9	7455	7539	7591	7541	7345	6939	6134	-	-
MJ20xxDT	63.5	929	1.4	1272	1317	1312	1263	1170	988	587	-	-
			2.8	3043	2971	3003	2940	2785	2478	1788	-	-
			4.1	4502	4653	4706	4631	4435	4021	3127	-	-
			5.5	6112	6316	6397	6312	6085	5596	4453	-	-
			6.9	7718	7985	8087	8002	7758	7197	5814	-	-
MJ20xxET	76.2	1119	1.4	1303	1326	1370	1388	1388	1357	1312	1232	1023
			2.8	2909	2945	3020	3091	3109	3083	3020	2878	2527
			4.1	4475	4528	4662	4777	4822	4809	4746	4564	4115
			5.5	6018	6098	6294	6454	6530	6539	6481	6268	5356
			6.9	7531	7642	7904	8122	8229	8265	8220	7989	7451
MJ22xxDT	63.5	1110	1.4	1508	1495	1463	1401	1312	1183	894	-	-
			2.8	3327	3309	3283	3203	3043	2771	2224	-	-
			4.1	5147	5142	5129	5040	4835	4448	3714	-	-
			5.5	6948	6966	6979	6890	6646	6170	5302	-	-
			6.9	8763	8803	8847	8772	8496	7944	6961	-	-
MJ24xxDT	63.5	1227	1.4	1677	1699	1690	1650	1566	1388	939	-	-
			2.8	3719	3750	3745	3692	3550	3225	2429	-	-
			4.1	5743	5787	5796	5738	5574	5155	4155	-	-
			5.5	7740	7802	7842	7798	7620	7144	6054	-	-
			6.9	9706	9804	9875	9839	9648	9101	7940	-	-

METRIC

PISTON TYPE SPRING BRAKE CHAMBERS

MODEL (g)	Rated Service Stroke (mm)	Vol. Displ. @ 6.89 bar Rated Service Stroke (cm^3) (e)	Application Pressure of (bar)	Service Brake Force - Output (Newtons) @ mm. of Stroke (f)								
				25.4	31.8	38.1	44.5	50.8	57.2	63.5	69.9	76.2
MJ24xxET	76.2	1363	1.4	1579	1592	1637	1673	1681	1641	1561	1450	1094
			2.8	3483	3514	3621	3714	3732	3679	3536	3336	2740
			4.1	5356	5418	5582	5729	5765	5703	5547	5267	4484
			5.5	7219	7304	7535	7731	7793	7713	7544	7206	6223
			6.9	9048	9168	9470	9719	9804	9733	9550	9194	8007
MJ27xxET	76.2	1742	1.4	1212	1161	1120	1073	1019	940	826	649	411
			2.8	2661	2578	2531	2484	2411	2291	2088	1753	1272
			4.1	4069	3974	3929	3895	3825	3676	3407	2961	2287
			5.5	5480	5372	5337	5325	5261	5097	4774	4227	3398
			6.9	6872	6770	6770	6758	6729	6565	6217	5609	4651
MJ30xxET	76.2	1762	1.4	2193	2260	2331	2331	2277	2215	2131	1984	1615
			2.8	4724	4853	4933	4951	4906	4849	4728	4488	3968
			4.1	7242	7375	7540	7553	7535	7486	7335	7010	6414
			5.5	9710	9915	10129	10155	10155	10115	9968	9559	8883
			6.9	12166	12402	12700	12753	12766	12757	12611	12210	11481
MJ36xxET	76.2	2124	1.4	2767	2771	2771	2758	2722	2660	2553	2375	1948
			2.8	5840	5827	5867	5881	5840	5760	5600	5284	4568
			4.1	8847	8847	8932	8972	8945	8861	8674	8274	7380
			5.5	11823	11863	12001	12072	12064	11983	11774	11312	10311
			6.9	14786	14866	15057	15168	15186	15115	14893	14390	13318

SERVICE CHAMBERS

MODEL	Rated Service Stroke (mm)	Vol. Displ. @ 6.89 bar Rated Service Stroke (cm^3)	Application Pressure of (bar)	Service Brake Force - Output (Newtons) @ mm. of Stroke								
				25.4	31.8	38.1	44.5	50.8	57.2	63.5	69.9	76.2
C12	44.5	426	1.4	845	845	667	400	-	-	-	-	-
			2.8	1824	1779	1557	890	-	-	-	-	-
			4.1	2891	2758	2424	1601	-	-	-	-	-
			5.5	4003	3892	3381	2180	-	-	-	-	-
			6.9	4982	4804	4137	2891	-	-	-	-	-
C16	57.2	740	1.4	1112	1112	1112	1112	956	601	-	-	-
			2.8	2580	2669	2669	2580	2180	1490	-	-	-
			4.1	4003	4070	4092	3959	3470	2269	-	-	-
			5.5	5427	5560	5560	5338	4671	3358	-	-	-
			6.9	6784	7050	7050	6717	6050	4604	-	-	-
CS16D	64.7	1060	1.4	25.4	31.8	38.1	44.5	50.8	57.2	63.5	-	-
			2.8	1192	1143	1103	1050	979	867	703	-	-
			4.1	2647	2589	2549	2487	2380	2206	1926	-	-
			5.5	4079	4026	3994	3937	3817	3590	3220	-	-
			6.9	5502	5453	5440	5396	5262	5000	4564	-	-
C16L	63.5	795	1.4	6917	6881	6886	6859	6721	6428	5925	-	-
			2.8	2691	2691	2691	2669	2647	2447	2113	-	-
			4.1	4137	4137	4137	4137	4048	3825	3336	-	-
			5.5	5605	5605	5649	5694	5605	5338	4849	-	-
			6.9	7073	7095	7162	7295	7117	6895	6227	-	-

METRIC

SERVICE CHAMBERS

MODEL	Rated Service Stroke (mm)	Vol. Displ. @ 6.89 bar Rated Service Stroke (cm^3)	Application Pressure of (bar)	Service Brake Force - Output (Newtons) @ mm. of Stroke								
				25.4	31.8	38.1	44.5	50.8	57.2	63.5	69.9	76.2
C16LH	63.5	1019	1.4	1179	1157	1112	1068	1001	890	734	-	-
			2.8	2660	2558	2513	2447	2358	2224	1935	-	-
			4.1	4092	4003	3959	3892	3781	3559	3247	-	-
			5.5	5516	5427	5382	5338	5204	4938	4537	-	-
			6.9	6939	6895	6850	6784	6650	6405	5849	-	-
CS18D	63.5	964	1.4	1201	1195	1174	1120	1028	880	631	-	-
			2.8	2740	2742	2730	2663	2520	2259	1781	-	-
			4.1	4270	4285	4292	4227	4051	3705	3052	-	-
			5.5	5779	5814	5848	5793	5593	5182	4395	-	-
			6.9	7273	7334	7403	7366	7153	6695	5815	-	-
C20	57.2	844	1.4	1446	1446	1423	1379	1112	712	-	-	-
			2.8	3158	3158	3069	2802	2402	1735	-	-	-
			4.1	4804	4826	4804	4626	4003	2758	-	-	-
			5.5	6272	6583	6539	6116	5338	3736	-	-	-
			6.9	8007	8251	8207	7962	6672	5004	-	-	-
CS20D	63.5	964	1.4	1299	1348	1379	1370	1303	1201	965	-	-
			2.8	2945	3025	3118	3118	3016	2847	2447	-	-
			4.1	4573	4693	4857	4849	4733	4519	3999	-	-
			5.5	6183	6356	6583	6574	6463	6219	5609	-	-
			6.9	7780	8002	8296	8300	8189	7913	7246	-	-
C20L	63.5	962	1.4	1312	1326	1334	1334	1334	1245	1090	-	-
			2.8	2914	2958	3025	3069	3025	2869	2535	-	-
			4.1	4493	4582	4715	4782	4715	4515	4003	-	-
			5.5	6139	6227	6450	6517	6450	6183	5560	-	-
			6.9	7784	7918	8185	8229	8185	7829	7162	-	-
CS20L	63.5	962	1.4	1312	1326	1334	1334	1334	1245	1090	-	-
			2.8	2914	2958	3025	3069	3025	2869	2535	-	-
			4.1	4493	4582	4715	4782	4715	4515	4003	-	-
			5.5	6139	6227	6450	6517	6450	6183	5560	-	-
			6.9	7784	7918	8185	8229	8185	7829	7162	-	-
CS22D	63.5	1121	1.4	1455	1459	1450	1406	1312	1197	956	-	-
			2.8	3274	3283	3287	3238	3096	2878	2411	-	-
			4.1	5089	5111	5142	5102	4924	4613	3959	-	-
			5.5	6895	6935	6997	6975	6770	6388	5582	-	-
			6.9	8683	8759	8856	8856	8638	8185	7259	-	-
CS24D	63.5	1119	1.4	1597	1655	1695	1686	1588	1423	1081	-	-
			2.8	3554	3665	3763	3745	3607	3341	2749	-	-
			4.1	5507	9693	5827	5800	5649	5307	4551	-	-
			5.5	7455	7704	7878	7860	7695	7295	6445	-	-
			6.9	9003	9301	9497	9501	9319	8883	7998	-	-
C24L	63.5	1141	1.4	1610	1655	1686	1677	1624	1495	1237	-	-
			2.8	3594	3665	3736	3745	3648	3438	3007	-	-
			4.1	5538	5649	5765	5792	5689	5440	4920	-	-
			5.5	7482	7638	7815	7847	7735	7446	6824	-	-
			6.9	9408	9599	9835	9893	9790	9488	8807	-	-

METRIC

SERVICE CHAMBERS

MODEL	Rated Service Stroke (mm)	Vol. Displ. @ 6.89 bar Rated Service Stroke (cm^3)	Application Pressure of (bar)	Service Brake Force - Output (Newtons) @ mm. of Stroke								
				25.4	31.8	38.1	44.5	50.8	57.2	63.5	69.9	76.2
C27	63.5	1100	1.4	1979	1944	1925	1887	1821	1732	1598	-	-
			2.8	4264	4258	4261	4229	4137	3991	3778	-	-
			4.1	6574	6602	6628	6599	6494	6310	6011	-	-
			5.5	8836	8903	8966	8928	8820	8617	8270	-	-
			6.9	11101	11209	11295	11267	11159	10943	10501	-	-
C30	63.5	1426	1.4	2340	2349	2349	2291	2175	1899	1290	-	-
			2.8	4982	5026	5049	4960	4733	4226	3194	-	-
			4.1	7638	7727	7775	7669	7375	6717	5373	-	-
			5.5	10262	10395	10489	10369	10026	9266	7700	-	-
			6.9	12873	13064	13198	13078	12704	11863	10129	-	-
C36	76.2	2084	1.4	2776	2776	2785	2753	2700	2598	2398	1984	1263
			2.8	5952	5934	5907	5889	5832	5774	5418	4835	3763
			4.1	9083	9030	9025	9021	8959	8790	8443	7700	6388
			5.5	12157	12099	12130	12157	12090	11926	11525	10698	9212
			6.9	15177	15133	15226	15320	15297	15173	14839	14096	12713
CS20L3H	76.2	1123	1.4	1303	1326	1370	1388	1388	1357	1312	-	-
			2.8	2909	2945	3020	3091	3109	3083	3020	-	-
			4.1	4475	4528	4662	4777	4822	4809	4746	-	-
			5.5	6018	6098	6294	6454	6530	6539	6481	-	-
			6.9	7531	7642	7904	8122	8229	8265	8220	-	-
C24L3	76.2	1388	1.4	1579	1592	1637	1673	1681	1641	1561	1450	1094
			2.8	3483	3514	3621	3714	3732	3679	3536	3336	2740
			4.1	5356	5418	5582	5729	5765	5703	5547	5267	4484
			5.5	7219	7304	7535	7731	7793	7713	7544	7206	6223
			6.9	9048	9168	9470	9719	9804	9733	9550	9194	8007
C30L3	76.2	1831	1.4	2193	2260	2331	2331	2277	2215	2131	1984	1615
			2.8	4724	4853	4933	4951	4906	4849	4728	4488	3968
			4.1	7242	7375	7540	7553	7535	7486	7335	7010	6414
			5.5	9710	9915	10129	10155	10155	10115	9968	9559	8883
			6.9	12166	12402	12700	12753	12766	12757	12611	12210	11481
CW9	44.5	361	1.4	778	756	667	245	-	-	-	-	-
			2.8	1579	1512	1334	774	-	-	-	-	-
			4.1	2358	2269	1846	1157	-	-	-	-	-
			5.5	3203	3069	2736	1668	-	-	-	-	-
			6.9	3981	3825	3447	2291	-	-	-	-	-
CW12	44.5	442	1.4	1001	1001	801	311	-	-	-	-	-
			2.8	2024	2024	1713	890	-	-	-	-	-
			4.1	3047	3025	2535	1557	-	-	-	-	-
			5.5	4070	4048	3648	2491	-	-	-	-	-
			6.9	5093	5026	4804	3559	-	-	-	-	-
CW16	44.5	606	1.4	1388	1379	1334	645	-	-	-	-	-
			2.8	2802	2758	2713	1713	-	-	-	-	-
			4.1	4270	4226	4092	2802	-	-	-	-	-
			5.5	5738	5671	5494	3470	-	-	-	-	-
			6.9	7139	7050	6939	4359	-	-	-	-	-

BRAKETECH PROGRAM

On-line Training Program Featuring MGM Brakes Products and Servicing Procedures

BrakeTECH Self-Study Training Program

MGM Brakes created the ***BrakeTECH Self-Study Training Program (Form No. 5038 and 5043)*** for counter and outside sales personnel and service technicians involved in providing replacement parts and maintenance to the heavy-duty trucking industry. The goal of this program is to assist participants in becoming more knowledgeable about the MGM Brakes products they sell and service each and every day.

The BrakeTECH Self-Study Training Program is offered free of charge. Please visit our website (http://www.mgmbrakes.com) to conveniently download the course booklet.

Participants can study the course booklets at their own pace, regardless of schedule, to become better acquainted with MGM Brakes products and service procedures. A final review quiz made up of true & false and multiple choice questions completes the course. Take your test on-line, submit it and you will be automatically notified of a pass/fail score. MGM Brakes issues a "Certificate of Completion" to any participant successfully scoring a minimum of 85% on the quiz. This certificate is automatically e-mailed to you in pdf format for easy download and printing. In addition, those who successfully complete the course (form 5038) will receive a BrakeTECH pin and hat, and those who successfully complete the course (form 5043) will be sent a patch and decal as tokens of MGM Brakes' appreciation for a job well done. This will go one step further toward singling participants out in the eyes of their colleagues and customers alike as true experts on MGM Brakes products.

If you did not pass, you are able to re-take the test until you obtain a passing score. Once you have passed the test, you are no longer permitted to take the test. Hats, pins, patches, and decals will be shipped to you when a passing score is earned.

Have more questions? Go to www.MGMBrakes.com for information on a sales representative in your area.

5038 Certificate and Hat

5043 Certificate, Patch and Magnet

NOTE: Product information and specifications subject to change without notice. Refer to the MGM Brakes website for latest updated information.

MGM BRAKES LIMITED WARRANTY POLICY

Page(s)

Section 12: Limited Warranty Policy 168-173

Limited Warranty Policy 170-172

Contact Outside U.S. A. and Canada 173

Effective April 1, 2016 all warranty submissions will require the MGM Brakes serial number (where used/available) as well as the associated part number.

This form supersedes any warranty forms dated prior to 4/2016.

MGM Brakes warrants to the original retail purchaser that the MGM Brakes products sold by the company, as listed on the MGM Brakes Limited Warranty matrix below will be free from defects in materials or workmanship for the warranty period shown in the matrix with no mileage restrictions.

Limitations of Warranty

This limited warranty covers all MGM Brakes products sold and/or installed on or after April 1, 2016 and is not retroactive.

This limited warranty does not cover defects or damages caused by abuse, misuse, road debris, accidents, fire, physical damage, improper installation, improper maintenance, improper service or use in a non-standard vehicle application that has not been pre-approved in writing by an authorized representative of MGM Brakes.

This limited warranty does not cover any claims when excessive amounts of foreign material is ingested into the spring brake via either the internal air system or externally.

Misuse includes, but is not limited to:

• Operation with the caging bolt tool plug/dust cap not properly installed.

• Operation without the vent hole plugs properly installed.

• Any products repaired with non-MGM Brakes service/component parts.

• Any product submerged in water per MGM Brakes Technical Bulletin EB 19-005.

MGM Brakes reserves the right to make product changes in design and product improvements without any obligation to modify or revise products previously sold.

This limited warranty does not cover any failure of a product due to a defect in design, plans or specifications where such design plans or specifications were supplied to MGM Brakes by any person on the buyer's behalf.

MGM Brakes does not authorize any other company or person to assume for it any warranty or other liability with respect to MGM Brakes products.

This limited warranty does not cover wires or sensor leads that are pinched, misrouted or not installed as per MGM Brakes recommendations. This limited warranty does not cover electronic components including CCMs/ECUs, Sensors, and Harnesses that are damaged as a result of installation and service which does not meet MGM Brakes recommendations.

MGM Brakes is not responsible for "down time" expenses, load/cargo damage or any other business costs or losses resulting from a failure or use of MGM Brakes products.

MGM Brakes is not responsible for any warranty claims that are not submitted/returned to MGM Brakes within 90 days of alleged failure date.

Limitation of Remedy

The responsibility of MGM Brakes under this limited warranty is expressly limited to the repair or replacement at MGM Brakes option of the alleged defective product.

In no event and under no circumstances shall MGM Brakes be responsible under this limited warranty for any other costs whatsoever, including but not limited to claims for labor, lost business, lost time, lost profits, loss of use, or any kind of indirect, incidental, consequential, special, or punative damages, however denominated or described. The remedy under this limited warranty is limited to repair or replacement.

Disclaimer of Other Warranties

This limited warranty is expressly in lieu of all other warranties expressed or implied, including without limitation any arising under statute, course of dealing, or use in trade. All other warranties, expressed or implied, including any warranty of merchantability, title, non-infringement, or fitness for a particular purpose are hereby excluded.

Warranty Claim Procedure

All warranty claims must be made either in writing via an OEM/Dealer/Distributor/Fleet Warranty administration system and conveyed to MGM Brakes or electronically via the MGM Brakes website.

MGM Brakes reserves the right to have any alleged warranty claim returned to MGM Brakes at customers expense for evaluation. If the warranty is valid, MGM Brakes will replace the product and reimburse the inbound shipping costs. If the returned product is not found to be defective, the product can be returned freight collect or disposed of within 30 days after disposition as the customer specifies.

For OEM dealers: without superseding the OEM coverage and administrative system, please file your claim online at the MGM Brakes website or contact your MGM Brakes Regional Sales Manager.

For Independent Distributors: please file your claim online at the MGM Brakes website or contact your MGM Brakes Regional Sales Manager.

For Fleets: please file your claim via your fleet warranty administrative system if applicable. Otherwise, please file your claim online at the MGM Brakes website or contact your dealer or distributor.

For a listing of the MGM Brakes Regional Sales Managers, please view the MGM Brakes website at www.mgmbrakes.com or call the MGM Brakes customer service at 1-800-527-1534, ext. 6021.

All warranty submissions will require the MGM Brakes serial number (where used/ available) as well as the associated part number and must be received by MGM Brakes within 90 days of alleged failure date.

Market	1 YEAR	2 YEARS	3 YEARS	4 YEARS	5 YEARS	6 YEARS
Over-the-Road Line Haul Box Van, Flatbed Tank Trailers		CW MJW	C CSB RA/RH	TR	TRB TR-T LTR	TR-TS LTR-T LTS MJS MJB
Refuse/Waste		CW TR w/o neoprene MJW	C CSB TR w/neoprene RA/RH	TRB TR-T w/neoprene LTR	TR-TS w/neoprene LTR-T LTS MJS MJB	
Severe Service*		CW TR LTR MJW	C CSB TRB TR-T LTR-T LTS RA/RH	TR-TS MJS MJB		
Off Road**	TR	CW TRB TR-T LTR MJW	C CSB TR-TS LTR-T LTS RA/RH	MJS MJB		
Transit Coach		CW TR MJW	C CSB TRB TR-T LTR RA/RH	TR-TS LTR-T LTS MJS MJB		
School Bus		CW MJW	C CSB TR RA/RH	TRB TR-T	TR-TS LTR	LTR-T LTS MJS MJB
e•STROKE Components CCM, Cables, Sensors, Harnesses	CCM/ECU Cables Sensors Harnesses					

* Severe Service = salt/gravel/dump, fertilizer, emergency, livestock/poultry, concrete/asphalt

**Off Road = logging, dump/construction

This warranty matrix includes: C - Series, All TR - Series, All LTR - Series, All LTS Series, MJ - Series, Wedge (MJW, CW) and Remote Mount Brakes (RA/RH).

This form supersedes any warranty forms dated prior to 4/2020.

NOTE: Product information and specifications subject to change without notice. Refer to the MGM Brakes website for latest updated information.

CONTACT OUTSIDE U.S.A. AND CANADA

Warranty policies published by MGM Brakes are for the U.S.A. and Canada only. Warranty policies are developed for the rules/regulations (gross vehicle weight, vehicle duty cycle, etc) and road conditions in the U.S.A. and Canada.

For warranty outside of the U.S.A. and Canada please contact MGM Brakes customer service at 1-800-527-1534, 704-547-7411 or mail@mgmbrakes.com.

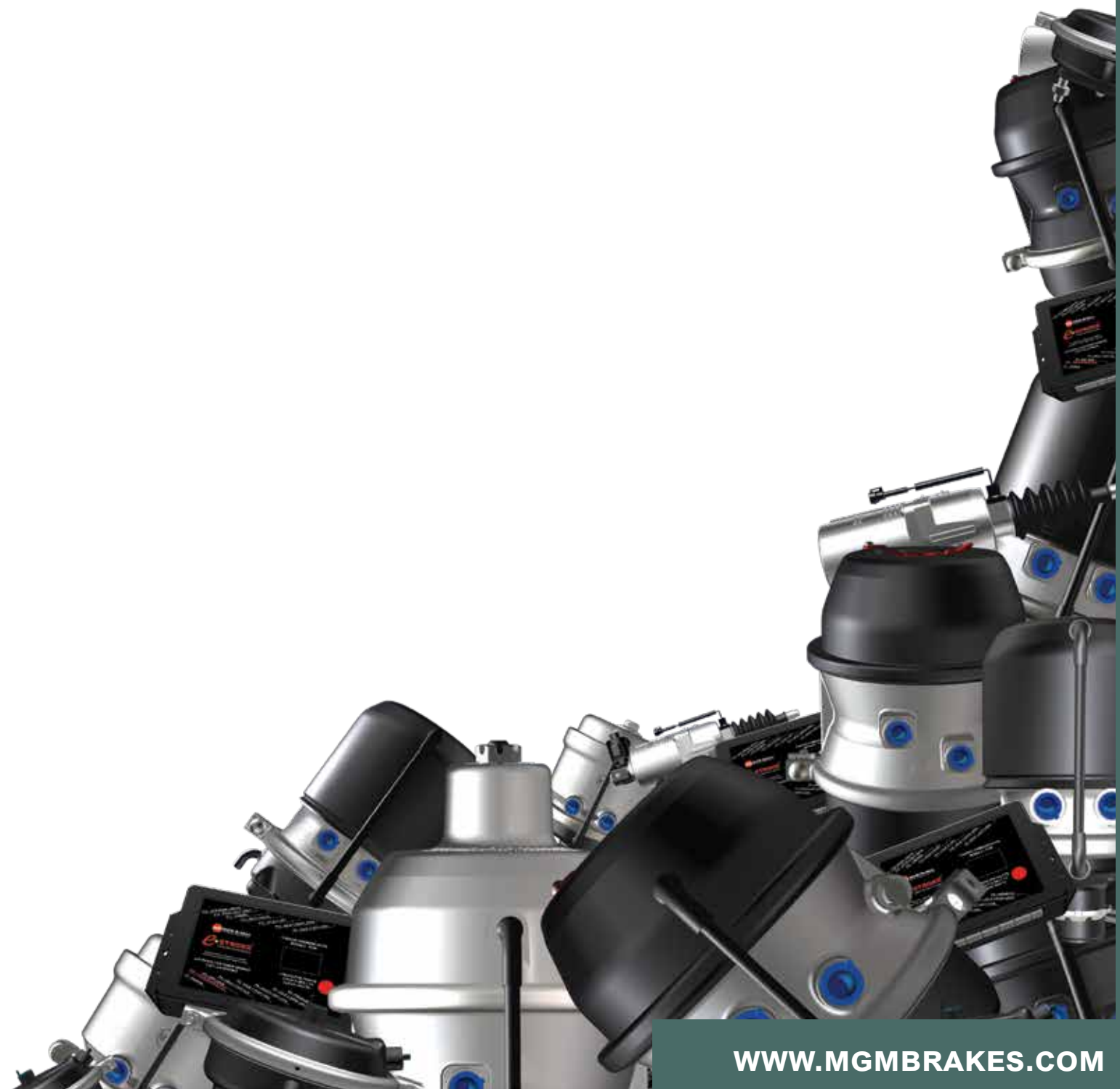

GLOSSARY OF TERMS

Glossary of Brake Actuator Terms:

Air Inlet Port Threaded opening in the actuator which provides a connection point to the vehicle air control system.

Boot Flexible rubber component which provides a seal in between the push-rod and NPC to keep dust, debris and liquid contaminates out of the non-pressure side of the service chamber. Typically used in air disc and wedge applications.

Brake Actuator Commonly referred to as a brake chamber; is an air brake component which is mounted to an axle bracket or air disc caliper and provides brake force to the foundation brake. The brake actuator receives air pressure from the vehicle air system to apply the service brakes. Parking brake actuators provide parking and emergency braking force from the power spring.

Also known as: Actuator, Can, Chamber, Combination, Combo, Complete, DDSB (Double Diaphragm Spring Brake), Emergency Brake, Maxi, Pot, Safety Brake, Spring Brake

Brake Drag Brake fails to completely release, causing lining or pads to maintain contact with the brake drum or rotor. May result in excessive lining, drum and disc wear. Brake drag can also result in excessive heat generation which could lead to a thermal event.

Brake Fade Usually the result of heat-induced expansion of the brake drum caused by the friction of the lining rubbing against the drum. This can lead to a reduction in brake force/efficiency.

Cage Refers to retaining the parking brake power spring in the compressed or “released” position. The power spring does not output force to the piston rod when fully caged.

Center Hole Diaphragm Guided design which aligns diaphragm piston rod and parking spring in parking chamber for increased durability.

Center Hole Shield Component used to keep debris out of NPC assembly from around the push-rod.

Center Seal Parking spring chamber piston rod air seal.

Chamber Size Refers to chamber size; i.e. 16, 20, 24, 30, 36, etc.

Also known as: **Type**

Clevis or Yoke Connects s-cam drum brake service chamber push-rod to slack adjuster. Uses clevis pin and cotter pin retainer to complete connection. A yoke can be threaded or welded.

NOTE: Product information and specifications subject to change without notice. Refer to the MGM Brakes website for latest updated information.

Corrosion Fighter	A composite spring guide component which is used in the parking brake chamber to isolate the parking power spring. The composite spring guide breaks the connection between metallic components eliminating the effects of corrosion by electrolysis.
CVSA	Abbreviation for Commercial Vehicle Safety Alliance.
Diaphragm	Flexible rubber membrane that completes the pressure chamber. The diaphragm moves under pressure to apply braking force to the piston rod.
Disc Brake	A type of commercial vehicle foundation brake which uses an air disc caliper and brake actuator assembly to apply clamping braking force to the friction material and brake disc/ rotor.
Double Diaphragm	A parking brake actuator which uses a diaphragm for the parking spring chamber rather than a piston.
Driveline	Pull type actuator designed to be mounted on the vehicle chassis. The actuator applies pull force to a parking brake cable which actuates a parking brake on the vehicle drive shaft. R7A and R8H models are driveline actuators.
E Model	Early MGM parking brake actuator model which was replaced by the TR model.
Emergency Brake	Parking brake actuator feature which allows parking power spring to automatically apply brake force if vehicle loses air brake control pressure.
Epoxy Coat	Highly durable, baked on coating to increase corrosion resistance.
External Breather Tube	Tube used to vent parking chamber through NPC housing.
Flange Case	Center section of parking brake actuator which provides air inlet connections and mating surfaces for the service and spring chambers. Usually made of aluminum and contains pocket for release bolt on TR models. ***Also known as:*** **Center Section**
FMVSS	Abbreviation for Federal Motor Vehicle Safety Standard.
Foundation Brake	Refers to the axle mounted brake assembly. Can be s-cam drum or air disc configuration. Foundation brakes may include the brake actuator, slack adjuster, caliper, friction material and drum or disc.

NOTE: Product information and specifications subject to change without notice. Refer to the MGM Brakes website for latest updated information.

HD	Heavy Duty
Head	Top of parking brake chamber which mates to the flange case to retain the parking spring.
Integrated Release Bolt	Non-removable caging bolt included with MJ and LT models. The integrated caging bolt includes a dual thread design to reduce height when extended in the caged position. The integrated caging bolt seals when in the released position. ***Also known as*: Integral manual release bolt**
Jam Nut	Threaded component used to “lock” the s-cam drum actuator yoke onto the service push-rod.
L Model	Original MGM “double diaphragm” parking brake actuator model which was replaced by the LTR-T model.
Long Stroke	Typically an actuator with a rated stroke exceeding that of the standard model chamber size.
Magnum	Brand name for early MGM MB-T and MG-T piston brakes models.
Neoprene	A diaphragm material which is resistant to oil contamination that may be present in the vehicle air system.
NHTSA	Abbreviation for National Highway Transportation Safety Administration.
Non-Pressure Chamber	A part of the service chamber assembly which provides a mounting surface for attachment to the vehicle foundation brake. **Also known as: NPC, Non-Pressure Housing, Mounting Base**
Piggyback	Parking brake assembly used as a service part replacement. The piggyback assembly can be mounted to an existing MGM NPC to replace the parking brake chamber components. Piggyback Plus Kit includes the parking brake chamber assembly, clamp band and diaphragm. ***Also known as:* Single, Parking Chamber**
Piston Brake Actuator	MJ type parking brake actuators which uses a piston and seal combination rather than a diaphragm. Piston actuators include higher parking force in a reduced package size compared to double diaphragm models. Piston actuators include an integrated release bolt.

NOTE: Product information and specifications subject to change without notice. Refer to the MGM Brakes website for latest updated information.

Pressure Cap Component which forms the top of a service chambers and includes air inlet ports.

Push-Rod Rod protruding from a brake actuator that provides brake force to the foundation brake slack adjuster or caliper lever arm.

Also known as: **Piston Rod**

Release Bolt Removable release tool used to “capture” or “cage” the spring brake portion of the TR brake chamber in the full released position. A short release bolt option may be used for shipping purposes with TR models.

Also known as: **Caging Bolt**

Remote Pull type actuator commonly used for vehicle accessories. Air pressure releases the spring force. Models R4A and R5AHD are remote type actuators.

Return Spring Spring located in the service chamber which is used to return the service push-rod when the brakes are released.

SAAR Abbreviation for Spring Apply Air Release. Pull type remote actuator which applies pull force from spring and releases pull force with air pressure.

SAE Abbreviation for Society of Automotive Engineers.

SAHR Abbreviation for Spring Apply Hydraulic Release. Pull type remote actuator which applies pull force from spring and releases pull force with hydraulic pressure.

S-Cam / Drum A type of commercial vehicle foundation brake which uses an “s-cam” tube rotated by a actuator to apply braking force to the friction material of a drum brake.

Service Brake Brake function which is used to slow and stop the vehicle during normal operation. Service brakes can be controlled by the driver brake pedal, ABS, traction control or interlock type systems.

Service Chamber Typically refers to the single chambered actuator which applies service brakes only. Also refers to the service brake portion of a parking brake actuator.

Short Stop Brand name for early MGM WM and WL wedge brake models.

Spanner Nut Castellated nut used to secure a wedge actuator during installation.

NOTE: Product information and specifications subject to change without notice. Refer to the MGM Brakes website for latest updated information.

Standard Stroke	Typically refers to actuators with 2.50 inch (63.5 mm) rated stroke. Select actuator sizes may differ in standard stroke rating.
Stop Guard	Brand name for early MGM L and E model spring brake actuators. Replaced by LTR-T and TR Models.
Stroke Alert	Orange stripe or mark on service push-rod that indicates when service chamber is approaching the CVSA out of adjustment limit.
Tamper Resistant	Assembly method which permanently rolls the parking brake chamber assembly together. This is a safety feature which prevents parking brake chamber disassembly.
Trunnion	Mounting bracket design for R4A and R5AHD type remote actuators.
Un-Cage	Releasing the parking power spring from the compressed or “released” position. Un-caging puts the parking brake actuator into operational condition.
Weatherseal	Plastic plug component which seals the release bolt hole in the parking chamber head. ***Also known as:*** **Cap, End Cap, Plug, Seal**
Wedge Brake	A type of foundation brake which applies brake force through a single or double wedge type mechanism.
Welded Yoke	A yoke which is permanently attached to service push-rod and is not adjustable.
X - Dimension	Measurement taken from the bottom of the NPC to end of the push-rod in the released position.
X-Pack	Bulk quantity of actuators or components packaged in one container. ***Also known as:*** **Bulk Pack**
Y - Dimension	Measurement taken from the bottom of the NPC to center-line of the s-cam drum actuator yoke pin in the released position.
Yoke	Connects service chamber push-rod to slack adjuster. ***Also known as:*** **Clevis**
Zero Stroke	When service push-rod is completely retracted into the service chamber in the released condition.

NOTE: Product information and specifications subject to change without notice. Refer to the MGM Brakes website for latest updated information.

Glossary of e•STROKE® Terms:

Actuator Sensor	A sensor which is mounted to e-Stroke brake actuator and measures piston rod stroke. Voltage signal sent to e-Stroke system ECU.
Configuration	A term used to explain how many wheel ends and the brake type that the e•STROKE® ECU is set to read.
Dragging Brake Fault	Condition when brakes apply but fail to release.
ECU	Abbreviation for Electronic Control Unit. Receives sensor voltage data and outputs brake status of vehicle. Transmits brake data to diagnostic tools and vehicle data network. ***Also known as:*** **CCM (Chassis Communication Module)**
e•DT	e•STROKE® Diagnostic Tool. Hand held or dash mounted "reader" that allows operator to view ECU data.
e•STROKE®	Electronic brake stroke monitoring system for drum and air disc brakes.
Firmware	A term used to describe what version of logic is installed in the ECU.
Harness	Multi-conductor jacketed electrical cable for power, sensor and diagnostic connections.
Low Lining Clearance	Condition where air disc caliper running clearance is below allowable limit.
Non-Function Fault	Condition when the brakes fail to apply.
Over-Stroke Fault	Condition when the brake applies beyond the CVSA allowable stroke adjustment limit.
Pressure Transducer	Measures service brake pedal application pressure. Voltage signal sent to e•STROKE® system ECU.
SAE J1708	Early commercial vehicle data network which was replaced by SAE J1939.

NOTE: Product information and specifications subject to change without notice. Refer to the MGM Brakes website for latest updated information.

SAE J1939 Commercial vehicle data network which may be configured as 250kbps or 500kbps communication speed.

Warning Light Indicator light mounted on vehicle dash that illuminates to indicate status of the e•STROKE® system.

NOTE: Product information and specifications subject to change without notice. Refer to the MGM Brakes website for latest updated information.

Visit our website:

www.mgmbrakes.com

Your full line supplier of spring brakes and brake monitoring systems!

Locations in:
Charlotte, NC • Murphy, NC • Cloverdale, CA
Springfield, MO • Ontario, Canada • Rotterdam, The Netherlands

6200 Harris Technology Blvd.
Charlotte, NC 28269
(800) 527-1534
(704) 547-7411
Fax: (704) 547-9367
email: mail@mgmbrakes.com

MGM Brakes is an ISO 14001:2015 Company
MGM Brakes is an ISO 9001:2015 Company

Form No. 6000SS - Revised 1-2021
(Product information and specifications subject to change without notice)
©2021 MGM Brakes All Rights Reserved Printed in U.S.A.